swiss lifting solutions

TECHNICAL DATA
ELECTRIC CHAIN HOISTS
ENTERTAINMENT

since
1957

General information

General information 03

Operating conditions

Operating conditions D8, D8 Plus, C1 03

Performance data and dimensions

Electric chain hoists LP D8	04 - 05
Electric chain hoists LPL D8	06 - 07
Electric chain hoists LP D8 Plus	08 - 09
Electric chain hoists LPL D8 Plus	10 - 11
Electric chain hoists LP C1	12 - 13
Electric chain hoists LPL C1	14 - 15

Accessories and options

Overview accessories and options	16 - 17
Flight cases	18
Briefcase controllers	19

General information

GIS electric chain hoists are used everywhere, where process safety of lifting systems is important: in the hard three-shift operations in automotive and other high production industries, in dusty or chemical aggressive environments, for outdoor use, for the entertainment industry or for extreme lifting heights in wind power plants.
GIS electric chain hoists and trolleys are made to high standards.

GIS electric chain hoists have been developed and manufactured in Switzerland for more than 60 years.

For many industrial lifting applications standard GIS electric chain hoists offer the ideal solution. Depending on the complexity of the task and the conditions on site we offer GIS special products. A wide range of accessories and options is available.

GIS electric chain hoists and trolleys meet the requirements of the EC Machinery Directive and the relevant EN and DIN standard.

The values listed in the tables are approximate values. Differences due to technical modifications are always possible and subject to change.

Operating conditions

Electric chain hoists are offered in a variety of types and equipment variants and with different safety devices. Therefore, the choice of the chain hoist is of considerable importance. Here, the hazards resulting from the type of use are to be used as a basis whilst also taking the specific conditions of use into account. The selection of the type of the electric chain hoist is dependent on the operating conditions.

Holding loads above people with secondary safety component (D8)
The D8 motor corresponds to a standard industrial electric chain hoist in accordance with EN14492-2 and SQP2:2024 with the difference that the D8 motor is usually used without a handheld controller and in mobile event technology climbing on its chain. As an additional securing measure, the installation of a secondary safety component is required to fix the load.

Holding loads above people without secondary safety component (D8 Plus)
The GIS motor in D8 Plus version is an electric chain hoist wich is specifically developped, rated and designed for holding loads above people. It is light and compact in design and thus perfectly suited for mobile use. All components which are in the flow of forces are statically dimensioned for the double of the nominal rated capacity.

Holding and moving loads above people (C1)
The GIS motor in C1 version is an electric chain hoist wich is specifically developped, rated and designed for holding and moving loads above people. It is light and compact in design and thus perfectly suited for mobile use and responds to the requirements in accordance with EN14492-2, SQP2:2024, EN17206.

With persons present under the load:

Use	D8	D8 with secondary safety device	D8 Plus	C1
Assembly and dismantling, set up mode	inadmissible	inadmissible	inadmissible	permissible
Holding loads	inadmissible	permissible	permissible	permissible
Scenic movement	inadmissible	inadmissible	inadmissible	permissible
Holding and moving people	inadmissible	inadmissible	inadmissible	inadmissible

Electric chain hoists LP D8

D8 motor in accordance with EN14492-2, SQP2:2024, DIN56950-5

Scope of supply

LPM250 / LP500 / LP1000: with eyebolt suspension, LP1600 / LP2500: without suspension,
with wear plate as additional chain guide, with terminal board with PMS relay (NF / BF with terminal board without PMS relay), without control, without geared limit switch, without equipping parts, without handles, without control switch, without control cable, without chain bucket,
chain safety min. 5:1 static
*LPM250 1Ph: only with control voltage 110 V or 230 V, without transformer, without geared limit switch
**LP500 / 1000 1Ph: only with control voltage 42 V, with transformer, without geared limit switch

Type	Lifting capacity at static chain safety 5:1 (kg)	6.4:1 (kg)	8:1 (kg)	10:1 (kg)	12.5:1 (kg)	16:1 (kg)	Lifting speed 50 Hz (m/min)	Lifting speed 60 Hz (m/min)	Motor power (kW)
LPM250/1NL.D8	400	320	250	200	160	125	4	4.8	0.25
LPM250/1SL.D8	-	-	-	-	-	125	8	9.6	0.25
LPM250/1NL1PH.D8	-	-	250	200	160	125	4	4.8	0.25
LPM250/1N1PH.D8	-	-	-	-	-	125	8	9.6	0.25
LP500/1NL.D8	800	630	500	400	320	250	4	4.8	0.55
LP500/1N.D8	800	630	500	400	320	250	8	9.6	0.72
LP500/1NF.D8	800	630	500	400	320	250	8/2	9.6/2.4	0.72/0.18
LP500/1NL1PH.D8	-	-	500	400	320	250	4	4.8	0.55
LP500/1N1PH.D8	-	-	-	-	-	250	8	9.6	0.55
LP1000/1NL.D8	1600	1250	1000	800	630	-	4	4.8	1.5
LP1000/1N.D8	1600	1250	1000	800	630	-	8	9.6	2.3
LP1000/1NF.D8	1600	1250	1000	800	630	-	8/2	9.6/2.4	2.3/0.68
LP1000/1NL1PH.D8	-	-	1000	800	630	-	4	4.8	1.5
LP1000/1N1PH.D8	-	-	-	-	-	500	8	9.6	1.5
LP1600/1NL.D8	2500	2000	1600	1250	1000	-	4	4.8	2.2
LP1600/1NF.D8	2500	2000	1600	-	-	-	8/2	9.6/2.4	3.7/0.93
LP1600/1SL.D8*	Must be tested! Reference values: 8 m/min / 1250 kg...16 m/min / 1000 kg						2.4 / 8 / 16 (15 / 50 / 100 Hz)		2.2
LP1600/2N.D8	5000	-	-	-	-	-	4	4.8	3.7
LP1600/2NF.D8	5000	-	-	-	-	-	4/1	4.8/1.2	3.7
LP2500/1NL.D8	-	-	2500	-	-	-	4	4.8	2.2
LP2500/1NF.D8	-	-	2500	-	-	-	8/2	9.6/2.4	3.7/0.93
LP2500/1B.D8	4000	3200	-	-	-	-	6.4	7.8	3.7
LP2500/1BL.D8	4000	3200	-	-	-	-	3.2	3.8	2.2
LP2500/1BF.D8	4000	3200	-	-	-	-	6.4/1.6	7.8/1.9	3.7/0.93
LP2500/2NL.D8	-	-	5000	-	-	-	2	2.4	2.2
LP2500/2NF.D8	-	-	5000	-	-	-	4/1	4.8/1.2	3.7/0.93
LP2500/2B.D8	-	6300	-	-	-	-	3.2	3.8	3.7
LP2500/2BL.D8	-	6300	-	-	-	-	1.6	1.9	2.2
LP2500/2BF.D8	-	6300	-	-	-	-	3.2/0.8	3.8/1	3.7/0.93

*only in combination with a frequency inverter provided by the customer

Type	Suspension	Number of chain falls	A1 (mm)	A2 (mm)	B1 (mm)	B2 (mm)	B3 (mm)	C1 (mm)	C2 (mm)	H1 (mm)	Schematic drawing
LPM250	Eyebolt	1	206	Ø30	368	21	-	134	39	366	9500.9202.5
	Hook	1	206	-	368	21	21	134	90	417	9500.9202.5
LP500	Eyebolt	1	272	Ø40	414	24	-	162	49	447	9511.9203.5
	Hook	1	272	-	414	24	24	162	127	525	9511.9203.5
LP1000	Eyebolt	1	337	Ø52	514	24	-	212	58	558	9515.9203.5
	Hook	1	337	-	514	24	24	212	123	623	9515.9203.5
LP1600	Eyebolt	1	382	Ø75	614	35	-	237	118	724	9520.9203.5
	Hook	1	382	-	614	35	35	237	147	753	9520.9203.5
	Eyebolt	2	382	Ø65	614	35	-	237	113	785	9520.9210.5
	Hook	2	382	-	614	35	41	237	204	876	9520.9210.5
LP2500	Eyebolt	1	382	Ø62	614	41	-	237	111	732	9521.9202.5
	Hook	1	382	-	614	41	41	237	204	825	9521.9202.5
	Eyebolt	2	382	Ø62	614	41	-	237	111	821	9521.9204.5
	Hook	2	382	-	614	41	41	237	204	914	9521.9204.5

- Standard voltages: 3 × 400 V / 50 Hz, 3 × 230 V / 50 Hz, 1 × 230 V / 50 Hz, 1 × 115 V / 50 Hz
- Profile steel chain according to EN818-7, case hardened and manganese phosphated
- Load hook according to DIN 15401, 360° rotatable
- Isolation class F
- Area of application: -15 °C to +50 °C
- Utilisation period 1600 h (DIN EN 14492 A5, ISO M5)

LPM250 / LP500 - 2500 D8
Lifting capacity up to 6300 kg

Power consumption fully-loaded, 3 x 400 V / 50 Hz (A)	Power consumption fully-loaded, 1 x 230 V / 50 Hz (A)	Protection class	Number of chain falls	Chain diameter (mm)	Chain weight per meter (kg)	Weight unequipped (kg)	Sound pressure level in hall, 1 m distance (dBA)	Fuse protection (A)
1.8	-	IP65	1	3.75x10.75	0.34	12	65	6
1.8	-	IP65	1	3.75x10.75	0.34	12	65	6
-	3.2	IP65	1	3.75x10.75	0.34	14	76	10
-	3.2	IP65	1	3.75x10.75	0.34	14	76	10
1.8	-	IP65	1	5.25x15	0.69	22	60	6
2.8	-	IP65	1	5.25x15	0.69	22	60	6
2.8/1.7	-	IP65	1	5.25x15	0.69	22	60	6
-	5.9	IP65	1	5.25x15	0.69	22	76	10
-	5.9	IP65	1	5.25x15	0.69	22	76	10
3.6	-	IP65	1	7.45x23	1.37	45	75	10
6.5	-	IP65	1	7.45x23	1.37	49	75	10
5.7/4.1	-	IP65	1	7.45x23	1.37	49	75	10
-	6	IP65	1	7.45x23	1.37	46	75	10
-	6	IP65	1	7.45x23	1.37	46	75	10
6.1	-	IP65	1	9.4x27.4	2.22	72	75	16
9.5/5.5	-	IP65	1	9.4x27.4	2.22	76	75	16
-	-	IP65	1	9.4x27.4	2.22	72	75	16
9.5	-	IP65	2	9.4x27.4	2.22	74	75	16
9.5/5.5	-	IP65	2	9.4x27.4	2.22	78	75	16
6.1	-	IP65	1	11.75x32.9	3.53	71	75	16
9.5/5.5	-	IP65	1	11.75x32.9	3.53	75	75	16
12.7	-	IP65	1	11.75x32.9	3.53	74	75	16
6.1	-	IP65	1	11.75x32.9	3.53	71	75	16
9.5/5.5	-	IP65	1	11.75x32.9	3.53	75	75	16
6.1	-	IP65	2	11.75x32.9	3.53	71	75	16
9.5/5.5	-	IP65	2	11.75x32.9	3.53	75	75	16
12.7	-	IP65	2	11.75x32.9	3.53	74	75	16
6.1	-	IP65	2	11.75x32.9	3.53	71	75	16
9.5/5.5	-	IP65	2	11.75x32.9	3.53	75	75	16

Eyebolt suspension

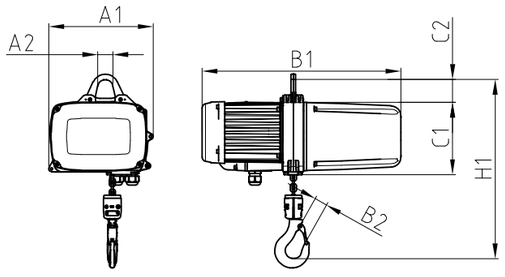

Hook suspension rotatable

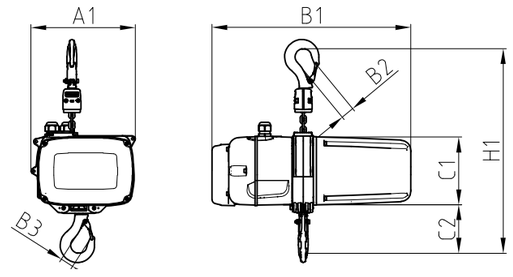

Electric chain hoists LPL D8

D8 motor in accordance with EN14492-2, SQP2:2024, DIN56950-5

BEST RATIO OF WEIGHT TO LOAD CAPACITY*

Scope of supply

With eyebolt suspension,
with wear plate as additional chain guide, with terminal board with PMS relay, without control,
without geared limit switch, without equipping parts, without handles,
without control switch, without control cable, without chain bucket,
chain safety min. 5:1 static

*Compared to LP chain hoists of the same body size, the LPL series uses chains with a larger cross section.
This results in a higher lifting capacity while maintaining the compact design and low weight.

Type	Lifting capacity at static chain safety 5:1 (kg)	6.4:1 (kg)	8:1 (kg)	10:1 (kg)	12.5:1 (kg)	16:1 (kg)	Lifting speed 50 Hz (m/min)	Lifting speed 60 Hz (m/min)	Motor power (kW)
LPML250/1NL.D8	500	-	-	-	-	-	4	4.8	0.38
LPL500/1NL.D8	1000	-	-	-	-	-	4	4.8	0.76
LPL1000/1NL.D8	2000	-	-	-	-	-	4	4.8	1.5

Type	Suspension	Number of chain falls	A1 (mm)	A2 (mm)	B1 (mm)	B2 (mm)	B3 (mm)	C1 (mm)	C2 (mm)	H1 (mm)	Schematic drawing
LPML250	Eyebolt	1	206	Ø30	368	26	-	134	39	398	9500.9205.5
	Hook	1	206	-	368	26	21	134	90	449	9500.9205.5
LPL500	Eyebolt	1	272	Ø40	414	24	-	162	49	447	9511.9229.5
	Hook	1	272	-	414	24	24	162	127	525	9511.9229.5
LPL1000	Eyebolt	1	353	Ø52	514	34	-	212	58	583	9515.9236.5
	Hook	1	353	-	514	34	34	212	139	664	9515.9236.5

swiss lifting solutions

- Standard voltages: 3 × 400 V / 50 Hz, 3 × 230 V / 50 Hz
- Profile steel chain according to EN818-7, case hardened and manganese phosphated
- Load hook according to DIN 15401, 360° rotatable
- Isolation class F
- Area of application: -15 °C to +50 °C
- Utilisation period 1600 h (DIN EN 14492 A5, ISO M5)

LPML250 / LPL500 / LPL1000 D8
Lifting capacity up to 2000 kg

Power consumption fully-loaded, 3 x 400 V / 50 Hz (A)	Power consumption fully-loaded, 1 x 230 V / 50 Hz (A)	Protection class	Number of chain falls	Chain diameter (mm)	Chain weight per meter (kg)	Weight unequipped (kg)	Sound pressure level in hall, 1 m distance (dBA)	Fuse protection (A)
2.4	-	IP65	1	4.1x11.5	0.43	12	65	10
2.6	-	IP65	1	5.7x16	0.84	23	60	10
4.4	-	IP65	1	8.2x23.7	1.48	46	75	10

Eyebolt suspension

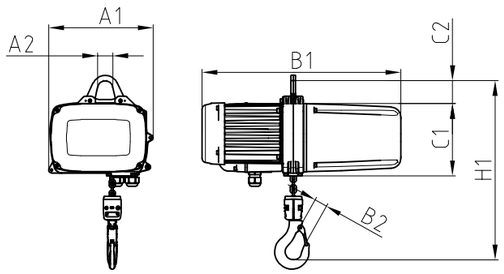

Hook suspension rotatable

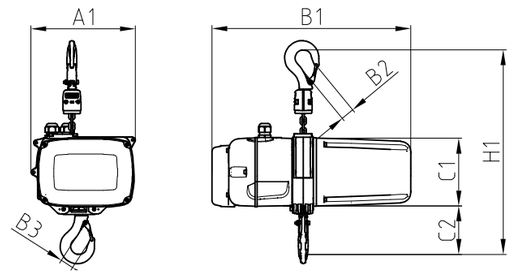

Electric chain hoists LP D8 Plus

D8 Plus motor in accordance with EN14492-2, SQP2:2024, EN17206, DIN56950-5

Scope of supply
LPM250 / LP500 / LP1000: with eyebolt suspension, LP1600 / LP2500: without suspension,
with wear plate as additional chain guide, with terminal board with PMS relay (NF with terminal board without PMS relay), with 2 brakes (400 V or 230 V), without control, without geared limit switch, without equipping parts, without handles, without control switch, without control cable, without chain bucket,
chain safety min. 8:1 static
*LPM250 1Ph: only with control voltage 110 V or 230 V, without transformer, without geared limit switch
**LP500 / LP1000 1Ph: only with control voltage 42 V, with transformer, with lengthening casing, without geared limit switch

Type	Lifting capacity at static chain safety 8:1 (kg)	10:1 (kg)	12.5:1 (kg)	16:1 (kg)	20:1 (kg)	25:1 (kg)	Lifting speed 50 Hz (m/min)	Lifting speed 60 Hz (m/min)	Motor power (kW)
LPM250/1NL.D8+	250	200	160	125	100	80	4	4.8	0.25
LPM250/1SL.D8+	-	-	-	125	100	80	8	9.6	0.25
LPM250/1NL1PH.D8+	250	200	160	125	100	80	4	4.8	0.25
LPM250/1N1PH.D8+	-	-	-	125	100	80	8	9.6	0.25
LP500/1NL.D8+	500	400	320	250	-	-	4	4.8	0.55
LP500/1N.D8+	500	400	320	250	-	-	8	9.6	0.72
LP500/1NF.D8+	500	400	320	250	-	-	8/2	9.6/2.4	0.72/0.18
LP500/1NL1PH.D8+	500	400	320	250	-	-	4	4.8	0.55
LP500/1N1PH.D8+	-	-	-	250	200	160	8	9.6	0.55
LP1000/1NL.D8+	1000	800	630	-	-	-	4	4.8	1.5
LP1000/1N.D8+	1000	800	630	-	-	-	8	9.6	2.3
LP1000/1NF.D8+	1000	800	630	-	-	-	8/2	9.6/2.4	2.3/0.68
LP1000/1NL1PH.D8+	1000	800	630	-	-	-	4	4.8	1.5
LP1000/1N1PH.D8+	-	-	-	500	400	-	8	9.6	1.5
LP1600/1NL.D8+	1600	1250	1000	-	-	-	4	4.8	2.2
LP1600/1NF.D8+	1600	-	-	-	-	-	8/2	9.6/2.4	3.7/0.93
LP1600/1SL.D8+*	Must be tested! Reference values: 8 m/min / 1250 kg...16 m/min / 1000 kg						2.4 / 8 / 16 (15 / 50 / 100 Hz)		2.2
LP1600/2N.D8+	3200	-	-	-	-	-	4	4.8	3.7
LP1600/2NF.D8+	3200	-	-	-	-	-	4/1	4.8/1.2	3.7/0.93
LP2500/1NL.D8+	2500	2000	-	-	-	-	4	4.8	2.2
LP2500/1NF.D8+	2500	2000	-	-	-	-	8/2	9.6/2.4	3.7/0.93

*only in combination with a frequency inverter provided by the customer

Type	Suspension	Number of chain falls	A1 (mm)	A2 (mm)	B1 (mm)	B2 (mm)	B3 (mm)	C1 (mm)	C2 (mm)	H1 (mm)	Schematic drawing
LPM250	Eyebolt	1	206	Ø30	368	21	-	134	39	367	9500.9204.5
	Hook	1	206	-	368	21	21	134	90	418	9500.9204.5
LP500	Eyebolt	1	272	Ø40	414 (1Ph: 495)	24	-	162	49	447	9511.9204.5
	Hook	1	272	-	414 (1Ph: 495)	24	24	162	127	525	9511.9204.5
LP1000	Eyebolt	1	337	Ø52	514 (1Ph: 595)	24	-	212	58	558	9515.9204.5
	Hook	1	337	-	514 (1Ph: 595)	24	24	212	123	623	9515.9204.5
LP1600	Eyebolt	1	382	Ø75	614	35	-	237	118	724	9520.9204.5
	Hook	1	382	-	614	35	35	237	147	753	9520.9204.5
	Eyebolt	2	382	Ø65	614	35	-	237	113	785	9520.9211.5
	Hook	2	382		614	35	41	237	204	876	9520.9211.5
LP2500	Eyebolt	1	382	Ø62	614	41	-	237	111	732	9521.9203.5
	Hook	1	382	-	614	41	41	237	204	825	9521.9203.5

- Standard voltages: 3 × 400 V / 50 Hz, 3 × 230 V / 50 Hz, 1 × 230 V / 50 Hz, 1 × 115 V / 50 Hz
- Profile steel chain according to EN818-7, case hardened and manganese phosphated
- Load hook according to DIN 15401, 360° rotatable
- Isolation class F
- Area of application: -15 °C to +50 °C
- Utilisation period 1600 h (DIN EN 14492 A5, ISO M5)

LPM250 / LP500 - 2500 D8 Plus
Lifting capacity up to 3200 kg

Power consumption fully-loaded, 3 x 400 V / 50 Hz (A)	Power consumption fully-loaded, 1 x 230 V / 50 Hz (A)	Protection class	Number of chain falls	Chain diameter (mm)	Chain weight per meter (kg)	Weight unequipped (kg)	Sound pressure level in hall, 1 m distance (dBA)	Fuse protection (A)
1.6	-	IP65	1	3.75x10.75	0.34	13	65	6
1.6	-	IP65	1	3.75x10.75	0.34	13	65	6
-	3.2	IP65	1	3.75x10.75	0.34	15	76	10
-	3.2	IP65	1	3.75x10.75	0.34	15	76	10
1.8	-	IP65	1	5.25x15	0.69	23	60	6
2.8	-	IP65	1	5.25x15	0.69	23	60	6
2.8/1.7	-	IP65	1	5.25x15	0.69	23	60	6
-	5.9	IP65	1	5.25x15	0.69	23	76	10
-	5.9	IP65	1	5.25x15	0.69	23	76	10
3.6	-	IP65	1	7.45x23	1.37	47	75	10
6.5	-	IP65	1	7.45x23	1.37	51	75	10
5.7/4.1	-	IP65	1	7.45x23	1.37	51	75	10
-	6	IP65	1	7.45x23	1.37	48	75	10
6.1	-	IP65	1	9.4x27.4	2.22	75	75	16
9.5/5.5	-	IP65	1	9.4x27.4	2.22	79	75	16
-	-	IP65	1	9.4x27.4	2.22	75	75	16
6.1	-	IP65	2	9.4x27.4	2.22	77	75	16
9.5/5.5	-	IP65	2	9.4x27.4	2.22	81	75	16
6.1	-	IP65	1	11.75x32.9	3.53	74	75	16
9.5/5.5	-	IP65	1	11.75x32.9	3.53	79	75	16

Eyebolt suspension

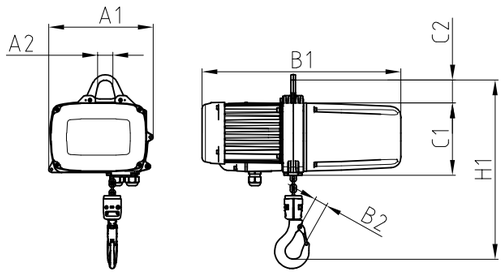

Hook suspension rotatable

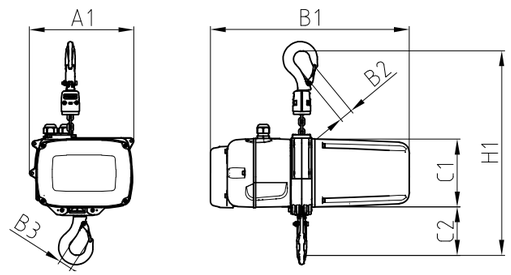

Electric chain hoists LPL D8 Plus

D8 Plus motor in accordance with EN14492-2, SQP2:2024, EN17206, DIN56950-5

BEST RATIO OF WEIGHT TO LOAD CAPACITY*

Scope of supply

With eyebolt suspension,
with wear plate as additional chain guide, with terminal board with PMS relay (NF with terminal board without PMS relay), with 2 brakes (400 V or 230 V), without control, without geared limit switch, without equipping parts, without handles, without control switch, without control cable, without chain bucket,
chain safety min. 8:1 static

*Compared to LP chain hoists of the same body size, the LPL series uses chains with a larger cross section.
This results in a higher lifting capacity while maintaining the compact design and low weight.

Type	Lifting capacity at static chain safety 8:1 (kg)	10:1 (kg)	12.5:1 (kg)	16:1 (kg)	20:1 (kg)	25:1 (kg)	Lifting speed 50 Hz (m/min)	Lifting speed 60 Hz (m/min)	Motor power (kW)
LPML250/1NL.D8+	320	-	-	-	-	-	4	4.8	0.38
LPL500/1NL.D8+	630	-	-	-	-	-	4	4.8	0.55
LPL500/1N.D8+	630	-	-	-	-	-	8	9.6	0.72
LPL500/1NF.D8+	630	-	-	-	-	-	8/2	9.6/2.4	0.72/0.18
LPL1000/1NL.D8+	1250	-	-	-	-	-	4	4.8	1.5
LPL1000/1N.D8+	1250	-	-	-	-	-	8	9.6	2.3
LPL1000/1NF.D8+	1250	-	-	-	-	-	8/2	9.6/2.4	2.3/0.68

Type	Suspension	Number of chain falls	A1 (mm)	A2 (mm)	B1 (mm)	B2 (mm)	B3 (mm)	C1 (mm)	C2 (mm)	H1 (mm)	Schematic drawing
LPML250	Eyebolt	1	209	Ø30	368	26	-	134	39	399	9500.9208.5
	Hook	1	209	-	368	26	21	134	90	450	9500.9208.5
LPL500	Eyebolt	1	272	Ø40	414	24	-	162	49	470	9511.9234.5
	Hook	1	272	-	414	24	24	162	127	548	9511.9234.5
LPL1000	Eyebolt	1	353	Ø52	514	34	-	212	58	604	9515.9238.5
	Hook	1	353	-	514	34	34	212	140	686	9515.9238.5

- Standard voltages: 3 × 400 V / 50 Hz, 3 × 230 V / 50 Hz
- Profile steel chain according to EN818-7, case hardened and manganese phosphated
- Load hook according to DIN 15401, 360° rotatable
- Isolation class F
- Area of application: -15 °C to +50 °C
- Utilisation period 1600 h (DIN EN 14492 A5, ISO M5)

LPML250 / LPL500 / LPL1000 D8 Plus
Lifting capacity up to 1250 kg

Power consumption fully-loaded, 3 x 400 V / 50 Hz (A)	Power consumption fully-loaded, 1 x 230 V / 50 Hz (A)	Protection class	Number of chain falls	Chain diameter (mm)	Chain weight per meter (kg)	Weight unequipped (kg)	Sound pressure level in hall, 1 m distance (dBA)	Fuse protection (A)
2.1	-	IP65	1	4.1x11.5	0.43	13	65	6
2	-	IP65	1	5.7x16	0.84	23	60	10
3.5	-	IP65	1	5.7x16	0.84	23	60	10
3.5/2.1	-	IP65	1	5.7x16	0.84	23	60	10
4.5	-	IP65	1	8.2x23.7	1.48	49	75	10
8	-	IP65	1	8.2x23.7	1.48	51	75	10
7.1/5.1	-	IP65	1	8.2x23.7	1.48	51	75	10

Eyebolt suspension

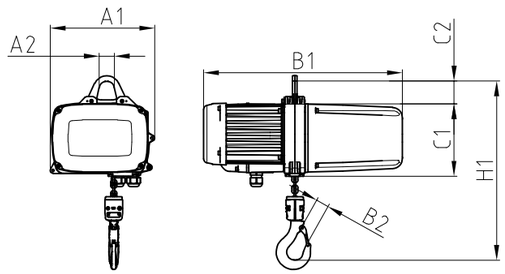

Hook suspension rotatable

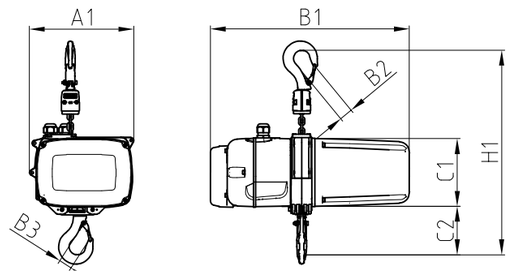

Electric chain hoists LP C1

C1 motor in accordance with EN14492-2, SQP2:2024, EN17206, DIN56950-5

Scope of supply

With eyebolt suspension for load sensor, without load sensor,
with geared limit switch with emergency stop, with wear plate as additional chain guide, with terminal board without PMS relay, with 2 brakes (400 V or 230 V), without control, without equipping parts, without handles, without control switch, without control cable, without chain bucket, without preparation for encoder on chain wheel, without encoder, no slipping clutch (overload shutdown by client),
chain safety min. 10:1 static

Type	Lifting capacity at static chain safety 10:1 (kg)	12.5:1 (kg)	16:1 (kg)	20:1 (kg)	25:1 (kg)	31.2:1 (kg)	Lifting speed 50 Hz (m/min)	Lifting speed 60 Hz (m/min)	Motor power (kW)
LP500/1NL.C1	400	320	250	-	-	-	4	4.8	0.55
LP500/1N.C1	400	320	250	-	-	-	8	9.6	0.72
LP500/1NF.C1	400	320	250	-	-	-	8/2	9.6/2.4	0.72/0.18
LPL500/1SL.C1*	Must be tested! Reference values: 8 m/min / 400 kg...16 m/min / 250 kg						2.4 / 8 / 16 (15 / 50 / 100 Hz)		0.55
LP500/1KL.C1*	Must be tested! Reference values: 16 m/min / 250 kg...32 m/min / 125 kg						4.8 / 16 / 32 (15 / 50 / 100 Hz)		0.55
LP1000/1NL.C1	800	630	500	-	-	-	4	4.8	1.5
LP1000/1N.C1	800	630	500	-	-	-	8	9.6	2.3
LP1000/1NF.C1	800	630	500	-	-	-	8/2	9.6/2.4	2.3/0.68
LP1000/1SL.C1*	Must be tested! Reference values: 8 m/min / 800 kg...16 m/min / 500 kg						2.4 / 8 / 16 (15 / 50 / 100 Hz)		1.5
LP1000/1KL.C1*	Must be tested! Reference values: 16 m/min / 500 kg...32 m/min / 250 kg						4.8 / 16 / 32 (15 / 50 / 100 Hz)		1.5
LP1600/1NL.C1	1250	1000	-	-	-	-	4	4.8	2.2
LP1600/1NF.C1	1250	1000	-	-	-	-	8/2	9.6/2.4	3.7/0.93
LP1600/1SL.C1*	Must be tested! Reference values: 8 m/min / 1250 kg...16 m/min / 1000 kg						2.4 / 8 / 16 (15 / 50 / 100 Hz)		2.2
LP1600/2N.C1	2500	-	-	-	-	-	4	4.8	2.2
LP1600/2NF.C1	2500	-	-	-	-	-	4/1	4.8/1.2	3.7
LP2500/1NL.C1	2000	-	-	-	-	-	4	4.8	2.2
LP2500/1NF.C1	2000	-	-	-	-	-	8/2	9.6/2.4	3.7/0.93

*only in combination with a frequency inverter provided by the customer

Type	Suspension	Number of chain falls	A1 (mm)	A2 (mm)	B1 (mm)	B2 (mm)	B3 (mm)	C1 (mm)	C2 (mm)	H1 (mm)	Schematic drawing
LP500	Eyebolt	1	272	Ø40	414	24	-	162	100	518	9511.9210.5
	Hook	1	272	-	414	24	24	162	180	598	9511.9210.5
LP1000	Eyebolt	1	337	Ø52	514	24	-	212	120	640	9515.9208.5
	Hook	1	337	-	514	24	24	212	192	713	9515.9208.5
LP1600	Eyebolt	1	382	Ø70	614	35	-	237	218	824	9520.9205.5
	Hook	1	382	-	614	35	42	237	316	922	9520.9205.5
	Eyebolt	2	382	Ø70	614	35	-	237	221	894	9520.9212.5
	Hook	2	382	-	614	35	42	237	310	983	9520.9212.5
LP2500	Eyebolt	1	382	Ø70	614	41	-	237	221	862	9521.9205.5
	Hook	1	382	-	614	41	41	237	310	951	9521.9205.5

- Standard voltages: 3 × 400 V / 50 Hz, 3 × 230 V / 50 Hz
- Profile steel chain according to EN818-7, case hardened and manganese phosphated
- Load hook according to DIN 15401, 360° rotatable
- Isolation class F
- Area of application: -15 °C to +50 °C
- Utilisation period 1600 h (DIN EN 14492 A5, ISO M5)

LP500 - 2500 C1
Lifting capacity up to 2500 kg

Power consumption fully-loaded, 3 x 400 V / 50 Hz (A)	Power consumption fully-loaded, 1 x 230 V / 50 Hz (A)	Protection class	Number of chain falls	Chain diameter (mm)	Chain weight per meter (kg)	Weight unequipped (kg)	Sound pressure level in hall, 1 m distance (dBA)	Fuse protection (A)
1.8	-	IP65	1	5.25x15	0.69	24	60	6
2.8	-	IP65	1	5.25x15	0.69	24	60	6
2.8/1.7	-	IP65	1	5.25x15	0.69	24	60	6
-	-	IP65	1	5.25x15	0.69	24	60	6
-	-	IP65	1	5.25x15	0.69	24	60	6
3.6	-	IP65	1	7.45x23	1.37	49	75	10
6.5	-	IP65	1	7.45x23	1.37	53	75	10
5.7/4.1	-	IP65	1	7.45x23	1.37	53	75	10
-	-	IP65	1	7.45x23	1.37	51	75	10
-	-	IP65	1	7.45x23	1.37	51	75	10
6.1	-	IP65	1	9.4x27.4	2.22	80	75	16
9.5/5.5	-	IP65	1	9.4x27.4	2.22	85	75	16
-	-	IP65	1	9.4x27.4	2.22	80	75	16
5.5	-	IP65	2	9.4x27.4	2.22	86	75	16
5.5/3	-	IP65	2	9.4x27.4	2.22	90	75	16
6.1	-	IP65	1	11.75x32.9	3.53	79	75	16
9.5/5.5	-	IP65	1	11.75x32.9	3.53	84	75	16

Eyebolt suspension

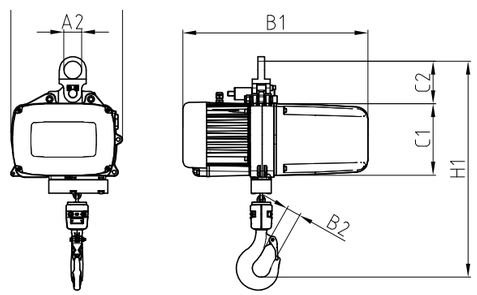

Hook suspension rotatable

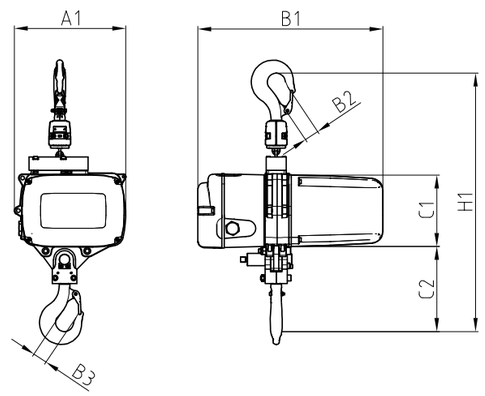

Electric chain hoists LPL C1

C1 motor in accordance with EN14492-2, SQP2:2024, EN17206, DIN56950-5

BEST RATIO OF WEIGHT TO LOAD CAPACITY*

Scope of supply

With eyebolt suspension for load sensor, without load sensor,
with geared limit switch with emergency stop, with wear plate as additional chain guide, with terminal board without PMS relay, with 2 brakes (400 V or 230 V), without control, without equipping parts, without handles, without control switch, without control cable, without chain bucket, without preparation for encoder on chain wheel, without encoder, no slipping clutch (overload shutdown by client),
chain safety min. 10:1 static

*Compared to LP chain hoists of the same body size, the LPL series uses chains with a larger cross section.
This results in a higher lifting capacity while maintaining the compact design and low weight.

Type	Lifting capacity at static chain safety 10:1 (kg)	12.5:1 (kg)	16:1 (kg)	20:1 (kg)	25:1 (kg)	31.2:1 (kg)	Lifting speed 50 Hz (m/min)	Lifting speed 60 Hz (m/min)	Motor power (kW)
LPL500/1NL.C1	500	-	-	-	-	-	4	4.8	0.55
LPL500/1N.C1	500	-	-	-	-	-	8	9.6	0.72
LPL500/1NF.C1	500	-	-	-	-	-	8/2	9.6/2.4	0.72/0.18
LPL500/1SL.C1*	Must be tested! Reference values: 8 m/min / 500 kg...16 m/min / 250 kg						2.4 / 8 / 16 (15 / 50 / 100 Hz)		0.55
LPL500/1KL.C1*	Must be tested! Reference values: 16 m/min / 250 kg...32 m/min / 125 kg						4.8 / 16 / 32 (15 / 50 / 100 Hz)		0.55
LPL1000/1NL.C1	1000	-	-	-	-	-	4	4.8	1.5
LPL1000/1N.C1	1000	-	-	-	-	-	8	9.6	2.3
LPL1000/1NF.C1	1000	-	-	-	-	-	8/2	9.6/2.4	2.3/0.68
LPL1000/1SL.C1*	Must be tested! Reference values: 8 m/min / 1000 kg...16 m/min / 500 kg						2.4 / 8 / 16 (15 / 50 / 100 Hz)		1.5
LPL1000/1KL.C1*	Must be tested! Reference values: 16 m/min / 500 kg...32 m/min / 250 kg						4.8 / 16 / 32 (15 / 50 / 100 Hz)		1.5

*only in combination with a frequency inverter provided by the customer

Type	Suspension	Number of chain falls	A1 (mm)	A2 (mm)	B1 (mm)	B2 (mm)	B3 (mm)	C1 (mm)	C2 (mm)	H1 (mm)	Schematic drawing
LPL500	Eyebolt	1	272	Ø40	414	24	-	162	100	518	9511.9233.5
	Hook	1	272	-	414	24	24	162	180	598	9511.9233.5
LPL1000	Eyebolt	1	353	Ø52	514	34	-	212	120	663	9515.9237.5
	Hook	1	353	-	514	34	24	212	192	735	9515.9237.5

swiss lifting solutions

- Standard voltages: 3 × 400 V / 50 Hz, 3 × 230 V / 50 Hz
- Profile steel chain according to EN818-7, case hardened and manganese phosphated
- Load hook according to DIN 15401, 360° rotatable
- Isolation class F
- Area of application: -15 °C to +50 °C
- Utilisation period 1600 h (DIN EN 14492 A5, ISO M5)

LPL500 / LPL1000 C1
Lifting capacity up to 1000 kg

Type	Power consumption fully-loaded, 3 x 400 V / 50 Hz (A)	Power consumption fully-loaded, 1 x 230 V / 50 Hz (A)	Protection class	Number of chain falls	Chain diameter (mm)	Chain weight per meter (kg)	Weight unequipped (kg)	Sound pressure level in hall, 1 m distance (dBA)	Fuse protection (A)
LPL500/1NL.C1	1.8	-	IP65	1	5.7x16	0.84	24	60	10
LPL500/1N.C1	2.8	-	IP65	1	5.7x16	0.84	24	60	10
LPL500/1NF.C1	2.8/1.7	-	IP65	1	5.7x16	0.84	24	60	10
LPL500/1SL.C1*	-	-	IP65	1	5.7x16	0.84	24	60	10
LPL500/1KL.C1*	-	-	IP65	1	5.7x16	0.84	24	60	10
LPL1000/1NL.C1	3.6	-	IP65	1	8.2x23.7	1.48	51	75	10
LPL1000/1N.C1	6.5	-	IP65	1	8.2x23.7	1.48	53	75	10
LPL1000/1NF.C1	6.5/4.1	-	IP65	1	8.2x23.7	1.48	53	75	10
LPL1000/1SL.C1*	-	-	IP65	1	8.2x23.7	1.48	51	75	10
LPL1000/1KL.C1*	-	-	IP65	1	8.2x23.7	1.48	51	75	10

Eyebolt suspension

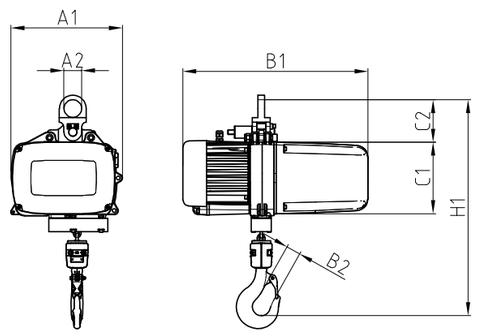

Hook suspension rotatable

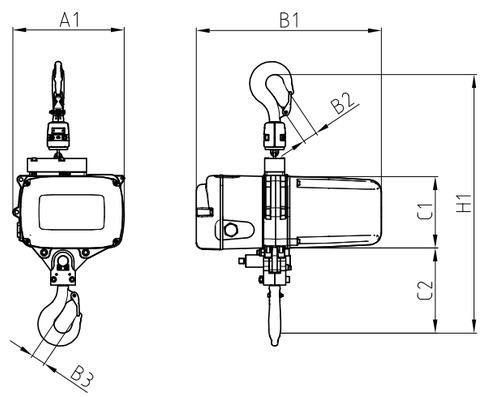

Accessories and options

The motors can be individually equipped:

	LPM250 / LPML250 D8 (1 lifting speed)	LPM 250 1PH D8 (1 lifting speed)	LPM 250 / LPML250 D8+ (1 lifting speed)	LPM250 1PH D8+ (1 lifting speed)	LP / LPL D8 (1 lifting speed)	LP D8 (2 lifting speeds)	LP D8 1PH D8 (1 lifting speed)	LP / LPL D8+ (1 lifting speed)	LP / LPL D8+ (2 lifting speeds)	LP D8 1PH D8+ (1 lifting speed)	LP / LPL C1 (1 lifting speed)	LP / LPL C1 (2 lifting speeds)
Wear plate as additional chain guidance	■	■	■	■	■	■	■	■	■	■	■	■
Textile chain container for various lifting heights	✓	✓	✓	✓	✓	✓	✓	✓	✓	✓	✓	✓
Suspension for textile chain container	✓	✓	✓	✓	✓	✓	✓	✓	✓	✓	✓	✓
Without contactor control, with terminal board with PMS relay	■	×	■	×	■	×	×	■	×	×	□	□
Control unit with PMS relay for limit switch direct control[J]	×	×	×	×	✓	×	×	✓	×	×	□	□
Without contactor control, with terminal board without PMS relay	✓	×	✓	×	✓	■	×	✓	■	×	■	■
Contactor control 24 VAC with emergency stop	✓	×	✓	×	✓	✓	×	✓	✓	×	✓	✓
Contactor control 42 VAC with emergency stop	✓	×	✓	×	✓	✓	×	✓	✓	×	✓	✓
Contactor control 42 VAC without emergency stop	✓	×	✓	×	✓	×	×	✓	×	×	✓	✓
Contactor control 110 VAC with emergency stop	✓	×	✓	×	✓	✓	×	✓	✓	×	✓	✓
Contactor control 110 VAC without emergency stop	✓	×	✓	×	✓	×	×	✓	×	×	✓	✓
Contactor control 230 VAC with emergency stop	✓	×	✓	×	✓	✓	×	✓	✓	×	✓	✓
Contactor control 24 VDC with emergency stop, without transformer	×	×	×	×	✓	✓	×	✓	✓	×	✓	✓
Contactor control 42 VAC with emergency stop, 1 phase	□	×	□	×	□	□	■	□	□	■	□	□
Contactor control 110 or 230 VAC with emergency stop, 1 phase	□	■	□	■	□	□	□	□	□	□	□	□
Geared limit switch[B]	✓	×	✓	×	✓	✓	✓	✓	✓	✓	□	□
Geared limit switch with 2 emergency switches[B]	✓	×	✓	×	✓	✓	×	✓	✓	×	■	■
Limit stop extern top and bottom[B+C]	✓	✓	✓	✓	✓	✓	✓	✓	✓	✓	□	□
Temperature monitoring Klixon[B]	×	✓	×	✓	✓	✓	✓	✓	✓	✓	✓	✓
PTC resistor without tripping device	×	×	×	×	✓	✓	×	✓	✓	×	✓	✓
2nd brake[A]	✓	✓	■	■	✓	✓	✓	■	■	■	■	■
Additional rectifier for 2nd brake	✓	✓	✓	✓	✓	✓	□	✓	✓	□	✓	✓
Brake surveillance[E]	×	×	×	×	✓	✓	×	✓	✓	×	✓	✓
Brake with manual brake release[F]	×	×	×	×	✓	✓	✓	✓	✓	✓	✓	✓
Gear grease food proof	✓	✓	✓	✓	✓	✓	✓	✓	✓	✓	✓	✓
Gear grease for low temperature up to - 30 °C	✓	✓	✓	✓	✓	✓	✓	✓	✓	✓	✓	✓
Eyebolt suspension[I]	■	■	■	■	■ / ✓	■ / ✓	■	■ / ✓	■ / ✓	■	□	□
Hook suspension rotatable or fixed	✓	✓	✓	✓	✓	✓	✓	✓	✓	✓	□	□
Handle kit	✓	✓	✓	✓	✓	✓	✓	✓	✓	✓	✓	✓
Equipment set with safety load hook	✓	✓	✓	✓	✓	✓	✓	✓	✓	✓	✓	✓

■ standard ✓ available as an option × not available as an option □ without benefit

	LPM250 / LPML250 D8 (1 lifting speed)	LPM 250 1PH D8 (1 lifting speed)	LPM 250 / LPML250 D8+ (1 lifting speed)	LPM250 1PH D8+ (1 lifting speed)	LP / LPL D8 (1 lifting speed)	LP D8 (2 lifting speeds)	LP D8 1PH D8 (1 lifting speed)	LP / LPL D8+ (1 lifting speed)	LP / LPL D8+ (2 lifting speeds)	LP D8 1PH D8+ (1 lifting speed)	LP / LPL C1 (1 lifting speed)	LP / LPL C1 (2 lifting speeds)
Power cable, 1 m, plug red, CEE 4-poles[G+H]	✓	×	✓	×	✓	×	×	✓	×	×	□	×
Control cable, 1 m, socket yellow, CEE 4-poles[G]	✓	×	✓	×	✓	×	×	✓	×	×	□	×
Extension cable, 10 or 20 m, plug red, CEE 4-poles[G+H]	✓	×	✓	×	✓	×	×	✓	×	×	□	×
Extension cable, 10 or 20 m, socket yellow, CEE 4-poles[G]	✓	×	✓	×	✓	×	×	✓	×	×	□	×
Connection cable 3x1.5mm² G-PUR / T12 3-pole	×	✓	×	✓	×	×	✓	×	×	✓	×	×
Control 2-channels direct control[H]	✓	×	✓	×	✓	×	×	✓	×	×	□	×
Control 2-channels low voltage 42 VAC[G]	✓	×	✓	×	✓	×	×	✓	×	×	□	×
Control 4-channels direct control[H]	✓	×	✓	×	✓	×	×	✓	×	×	□	×
Control 4-channels low voltage 42 VAC[G]	✓	×	✓	×	✓	×	×	✓	×	×	□	×
Safety remote control 24 VAC control voltage[B]	×	×	×	×	✓	✓	×	✓	✓	×	□	□
Safety remote control 42 VAC control voltage[B]	×	×	×	×	✓	✓	✓	✓	✓	✓	□	□
Protection plate for radio remote control	×	×	×	×	✓	✓	✓	✓	✓	✓	□	□
Control switch, 2 buttons[B]	✓	✓	✓	✓	✓	✓	✓	✓	✓	✓	□	□
Control switch, 2 buttons 5-pole pluggable[B]	×	×	×	×	✓	✓	✓	✓	✓	✓	□	□
Control switch, 2 buttons 10-pole pluggable for radio control[B]	×	×	×	×	✓	✓	✓	✓	✓	✓	□	□
Operating data counter at 42 VAC control voltage[B]	✓	×	✓	×	✓	✓	✓	✓	✓	✓	✓	✓
Eyebolt suspension for load sensor	✓	□	✓	□	✓	✓	□	✓	✓	□	■	■
Hook suspension for load sensor	✓	□	✓	□	✓	✓	□	✓	✓	□	✓	✓
Load sensor 0 - 10 V	✓	×	✓	×	✓	✓	×	✓	✓	×	✓	✓
Load sensor 4 -20 mA	✓	×	✓	×	✓	✓	×	✓	✓	×	✓	✓
Protection plate for load sensor	✓	□	✓	□	✓	✓	□	✓	✓	□	✓	✓
Preparation for encoder on chain wheel	×	×	×	×	✓	✓	×	✓	✓	×	✓	✓
Incremental encoder Kübler 8.3620.2244.1024	×	×	×	×	✓	✓	×	✓	✓	×	✓	✓
Preparation for encoder on motor shaft, without encoder	×	×	×	×	✓	✓	×	✓	✓	×	✓	✓
Lengthening casing[A]	×	×	×	×	✓	✓	✓	✓	✓	■	✓	✓
Execution CSA / CUS[D]	✓	✓	✓	✓	✓	✓	✓	✓	✓	✓	✓	✓

■ standard ✓ available as an option × not available as an option □ without benefit

[A] LP 500 / LP1000 1Ph: a lengthening casing is needed for the 2nd brake

[B] in combination with contactor control

[C] not suitable for operation as climbing hoist

[D] only for the following voltages: 3 x 230 V / 60 Hz, 3 x 460 V / 60 Hz, 3 x 575 V / 60 Hz, 1 x 115 V / 60 Hz, 1 x 230 V / 60 Hz

[E] brake voltage 230 or 400 VAC

[F] brake voltage 400 VAC

[G] in combination with contactor control without emergency stop

[H] in combination with terminal board with PMS relay

[I] basic version LP1600 / 2500 without suspension

[J] available for LP500 / 1000, voltage 3 x 400 V / 50 Hz

Flight cases for electric chain hoists LP/LPL

For gentle and space-saving transport

Scope of supply
Flight case made of 9 mm thick birch plywood in black colour,
with wooden support cradle in the case and foam insert in the lid for electric chain hoists,
with hinged top lid and lid stays, lid with 4 recessed dishes for stacking flight cases,
with butterfly latches, with folding carrying handles, with Ø100 mm swivel castors and locking brakes,
with dish for A5 tour label, GIS logo on front and back

Flight case LPM/LPML250
For 4 electric chain hoists

Flight case LP/LPL500
For 2 electric chain hoists

Flight case LP/LP1000
For 1 electric chain hoist

Flight case LP1600/2500
For 1 electric chain hoist

Article number	Chain hoist type	Number of chain hoists	Unladen weight (kg)	Castors (with brake)	Folding handles	Butterfly latches	A1 (mm)	B1 (mm)	C1 (mm)	H1 (mm)
9500.3515.2	LPM/LPML250	4	39.2	4 (2)	4	2	798	628	478	624
9511.3522.2	LP/LPL500	2	33.2	4 (2)	4	2	798	498	503	649
9515.3376.3	LP/LPL1000	1	33.8	4 (2)	4	2	598	598	603	749
9520.3295.3	LP1600/2500	1	55	4 (2)	4	2	680	598	723	894

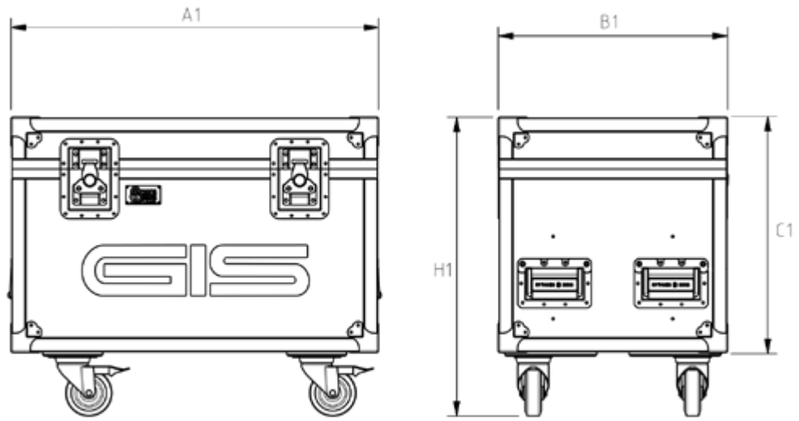

Briefcase controllers for electric chain hoists LP/LPL

For electric chain hoists controlled directly or with low voltage

Scope of supply
Mobile control unit as a carrying case in a waterproof plastic housing,
with thermal magnetic circuit breakers against overcurrent and short circuits,
with lockable emergency stop button, with phase indicator lights and 'READY' indicator

Options
SMART-LINK system for the connection of several controllers, plug-in control switch with extension cable

Controller Direct control
For up to 8 electric chain hoists

Controller Low voltage
For up to 4 electric chain hoists

Article number	Control type	Number of channels	Net weight (kg)	Power	Power input	Power and control outputs	Protection	A1 (mm)	B1 (mm)	C1 (mm)
9511.3526.4	Direct controlled	2	5.5	3 x 380 - 415 V / 47 - 63 Hz	CEE Plug 32 A - 3P+N+E	2 x CEE Plugs 16 A 3P+E	1 Braker for 2 ouput plugs: Max. 10 Ampere	336	300	148
9511.3527.4	Low voltage 24 / 42 / 110 V	2	5.5	3 x 380 - 415 V / 47 - 63 Hz	CEE Plug 32 A - 3P+N+E	2 x 2 CEE Plugs 16 A 3P+E	1 Braker for 2 ouput plugs: Max. 10 Ampere	336	300	176
9511.3528.4	Direct controlled	4	8	3 x 380 - 415 V / 47 - 63 Hz	CEE Plug 32 A - 3P+N+E	4 x CEE Plugs 16 A 3P+E	2 Brakers for each 2 ouput plugs: Max. 20 Ampere	464	366	176
9511.3529.4	Low voltage 24 / 42 / 110 V	4	10	3 x 380 - 415 V / 47 - 63 Hz	CEE Plug 32 A - 3P+N+E	2 x 4 CEE Plugs 16 A 3P+E	2 Brakers for each 2 ouput plugs: Max. 20 Ampere	555	428	211
-	Direct controlled	6	10	3 x 380 - 415 V / 47 - 63 Hz	CEE Plug 32 A - 3P+N+E	6 x CEE Plugs 16 A 3P+E	2 Brakers for each 3 ouput plugs: Max. 20 Ampere	464	366	176
-	Direct controlled	8	15	3 x 380 - 415 V / 47 - 63 Hz	CEE Plug 32 A - 3P+N+E	8 x CEE Plugs 16 A 3P+E	4 Brakers for each 2 ouput plugs: Max. 25.2 Ampere	555	428	211

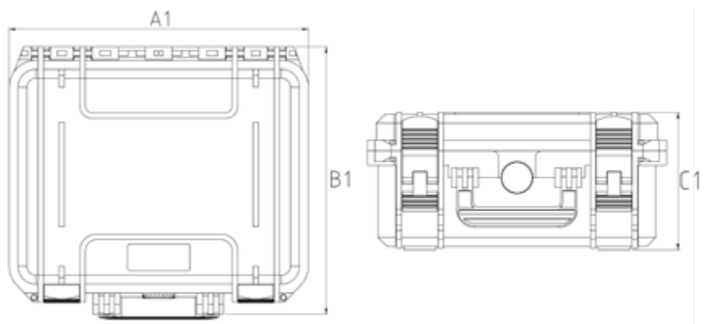

swiss lifting solutions

Subject to change reserved. 02.26 9500.9111.1

LPM250 - the lightweight

With a weight of only 12 kg and a lifting capacity of 320 kg, the LPM250 in D8 Plus version is the light-weight among the motors in the entertainment industry. The D8 motor can even lift 500 kg. It is usable as climbing or stationary hoist without modification and perfectly suited for mobile outdoor use due to its protection class IP65. Four LPM250 fit perfectly into the compact flight case.

LP500 - the versatile

The LP500 was developed as a D8 Plus motor for a lifting capacity of 630 kg. The dead weight is only 23 kg and even with a lifting height of 18 m the overall weight remains less than 40 kg. We offer the LP500 in the versions D8, D8 Plus, C1 or customised and with a large variety of accessories and options. Two LP500 fit into the flight case.

LP2500 - the powerful

The heavy worker among the GIS motors lifts a remarkable 2500 kg as a D8 Plus chain hoist in single fall operation. The maximum lifting capacities in D8 version are 4000 kg (1 fall) respectively 6300 kg (2 falls). For scenic appplications, the LP2500 is available as a C1 motor with a maximum lifting capacity of 2000 kg.

GIS AG – the specialist for electric chain hoists and crane systems Founded in 1957 I With own subsidiaries in Germany, England and the United States I Development and production of electric chain hoists in Switzerland for over 60 years I Certified to ISO 9001 since 1994 I International sales network with over 40 qualified partners worldwide