INSTALLATION, OPERATING & MAINTENANCE MANUAL

ELECTRIC CHAIN HOIST

ENTERTAINMENT TECHNOLOGY

LODESTAR®

Before installing hoist, fill in the information below.

Model Number _____

Serial No. _____

Purchase Date _____

Voltage _____

Rated Load _____

RATED LOADS 1/4 TO 2 TONNES
250 KG TO 2000 KG

⚠ WARNING ⚠

Follow all instructions and warning for inspecting, maintaining and operating this hoist.

The use of any hoist presents some risk of personal injury or property damage. That risk is greatly increased if proper instructions and warnings are not followed. Before using this hoist, each operator should become thoroughly familiar with all warnings, instructions and recommendations in this manual. **Retain this manual for future reference and use.**

Forward this manual to operator. Failure to operate equipment as directed in manual may cause injury.

P/N: 10001681 (REV AF) August 2020

CM HOIST PARTS AND SERVICES ARE AVAILABLE IN THE UNITED STATES AND CANADA

PARTS FOR YOUR HOIST ARE AVAILABLE FROM YOUR LOCAL AUTHORIZED REPAIR STATION. FOR THE NAME OF THE NEAREST PARTS OR SERVICE CENTER, VISIT OUR WEB SITE WWW.CMWORKS.COM OR CALL OUR CUSTOMER SERVICE DEPARTMENT AT 800-888-0985.

AN ELECTRONIC COPY OF THIS MANUAL AND THE CM HOIST PARTS AND SERVICES LIST IS AVAILABLE AT:

http://www.cm-et.com/ElectricChainMotors/Lodestar

⚠ WARNING ⚠

Follow all instructions and warning for inspecting, maintaining and operating this hoist.

SAFETY PRECAUTIONS

Each Entertainment-Lodestar Electric Hoist is built in accordance with the specifications contained herein and at the time of manufacture complied with our interpretation of applicable sections of the *American Society of Mechanical Engineers Code B30.16 “Overhead Hoists”, the National Electrical Code (ANSI/NFPA 70), the Occupational Safety and Health Act, British Health Safety Executives, TUV and CE Directive. Since OSHA states the National Electrical Code applies to all electric hoists, installers are required to provide current overload protection and grounding on the branch circuit section in keeping with the code. Check each installation for compliance with the application, operation and maintenance sections of these articles.

The safety laws for elevators, lifting of people and for dumbwaiters specify construction details that are not incorporated in CM hoists. For such applications, refer to the requirements of applicable state and local codes, and the American National Safety Code for elevators, dumbwaiters, escalators and moving walks (ASME A17.1). Columbus McKinnon Corporation cannot be responsible for applications other than those for which CM equipment is intended.

*Copies of this Standard can be obtained from ASME Order Department, 22 Law Drive, Box 2300, Fairfield, NJ 07007-2300, U.S.A.

THIS SYMBOL POINTS OUT IMPORTANT SAFETY INSTRUCTIONS WHICH IF NOT FOLLOWED COULD ENDANGER THE PERSONAL SAFETY AND/OR PROPERTY OF YOUR SELF AND OTHERS. READ AND FOLLOW ALL INSTRUCTIONS IN THIS MANUAL AND ANY PROVIDED WITH THE EQUIPMENT BEFORE ATTEMPTING TO OPERATE YOUR LODESTAR HOIST.

⚠ WARNING

Usage of hoists that do not involve lifting of the load on the lower hook or using hoists in the hoist down position without special precaution may cause an accident resulting in injury and/or property damage.

⚠ WARNING

Improper operation of a hoist can create a potentially hazardous situation which, if not avoided, could result in death or serious injury. To avoid such a potentially hazardous situation, **the operator shall:**

1. **NOT** lift people.
2. **NOT** allow people on unsecured load without fall protection.
3. **NOT** exceed rated capacity of hoist.
4. **NOT** remove or obscure any capacity or warning label.
5. Check the supporting structure. The connection between the load hook and structure. The load itself and the connection between the hoist support and the load for their ability to withstand the loads imposed with an adequate design factor.
6. Tie off the load with auxiliary chains or cables before access to the area beneath the load is permitted. As an alternative, the system may be designed such that malfunction or failure of one hoist’s load bearing components does not cause load loss and/or overloading of any other hoists in the system. Note that in such a system, hoist performance and function must be monitored visually or with use of load cells.
7. Read hoist manual and special instructions before installing and operating the hoist.

SUCCESSFUL THEATRICAL HOIST DOWN OPERATION REQUIRES THE FOLLOWING ACTIONS:

At the loose end, maintain a minimum of 24 inches (61 cm) of chain freely hanging over the side of hoist.

Keep load chain well lubricated using Lubriplate® 10R Bar and Chain oil.

Do make sure hoist is phased properly and chain travel limits function properly.

If a chain container is used, inspect before each use for damaged, loose hardware and water drainage provisions. Make certain container attachment hardware has an adequate design factor of a minimum of 5 to 1. Also, make sure chain container is of sufficient capacity: chain in fully loaded container shall not exceed 75% of container height.

⚠ WARNING

Improper operation of a hoist can create a potentially hazardous situation which, if not avoided, could result in minor or moderate injury. To avoid such a potentially hazardous situation, **the operator shall:**

1. Maintain a firm footing or be otherwise secured when operating the hoist.
2. Check brake function by tensioning the hoist prior to each lift operation.
3. Use hook latches. Latches are to retain slings, chains, etc. under slack conditions only.
4. Make sure the hook latches are closed and not supporting any parts of the load.
5. Make sure the load is free to move and will clear all obstructions.
6. Avoid swinging the load or hook.
7. Make sure hook travel is in the same direction as shown on the controls.
8. Inspect the hoist regularly, replace damaged or worn parts, and keep appropriate records of maintenance.
9. Use CM parts when repairing the unit.
10. Lubricate load chain per instructions in this manual.
11. **NOT** use the hoist load limiting or warning device to measure load.
12. **NOT** use limit switches as routine operating stops. They are emergency devices only.
13. **NOT** allow your attention to be diverted when operating hoist.
14. **NOT** allow the hoist to be subjected to sharp contact with other hoists, structures, or objects through misuse.
15. **NOT** adjust or repair the hoist unless qualified to perform such adjustments or repairs.

FOREWORD

This manual contains important information to help you properly install, operate and maintain your hoist for maximum performance, economy and safety.

Please study its contents thoroughly before putting your hoist into operation. By practicing correct operating procedures and by carrying out the recommended preventive maintenance suggestions, you will experience long, dependable and safe service. After you have completely familiarized yourself with the contents of this manual, we recommend that you carefully file it for future reference.

The information herein is directed to the proper installation, use, care, and maintenance of the hoist and does not comprise a handbook on the broad subject of rigging.

Rigging can be defined as the process of lifting and moving heavy loads using hoists and other mechanical equipment. Skill acquired through specialized experience and study is essential to safe rigging operations. For rigging information, we recommend consulting a standard textbook on the subject.

TABLE OF CONTENTS

Safety Precautions 3

Foreword 4

General Information
- Online Resources 2
- Specifications 5
- Troubleshooting 18
- Electrical Data 20
- Torque Specifications 21

Accessories
- Hook Suspensions 5
- Latchlok Hooks 5

Installation & Assembly
- Unpacking Information 6
- Installing Suspension 6
- Attaching Load Chain 7
- Lower Hook Block Pin 7
- Chain Stop 7
- Cutting Chain 7
- External Chain Plate 8
- Power Supply and Electrical Connections 8
- Checking Limit Switch Operation 9

Operating Instructions
- General 10
- Hoist Operating Instruction 10
- Safety Procedures 10
- Stage Operation 10

Inspection
- Inspection 11
- Preventative Maintenance 11
- Hook Inspection 11
  - Replacement Criteria 13
- Inspecting the Load Chain 13
  - Removal and Installation 14

Ordering Instructions
- General 15

Maintenance
- Load-limiter 15
- Hoist Lubrication 15
- Gears 15
- Brake Assembly 15
- Limit Switch Adjustment 15

LIST OF TABLES

Table	Title	Page
1	Specifications	5
2	Voltage Requirements	9
3	Extension Cords	9
4	Inspection Schedule	12
5	Hook Dimensions	13
6	Chain Dimensions	13
7	Limit Switch – Hook Travel	16
8	Limit Switch – Dimensions	16
9	Troubleshooting	18
10	Electrical Data	20
11	Torque Specifications	21

LIST OF ILLUSTRATIONS

Figure	Title	Page
1	Hook Suspensions	5
2	Latchlok Hook	5
3	Double Reeved Suspension Assembly	6
4	Suspension Components	6
5	Chain Stop	7
6	Cutting Chain by Nicking	7
7	Cutting Chain with a Bolt Cutter	7
8	External Chain Plate	8
9	Voltage Change Board	8
10	Location of Components	8
11	Printed Contactor Board	8
12	Hook Inspection	13
13	Chain Wear Areas	13
14	Chain Dimensions	13
15	Gaging Load Chain Wear	13
16	Chain Embossing	13
17	Limit Switches, Models B-F	16
18	Rotatable Limit Switches, Models B-F	16
19	Limit Switches, Models J-RR	16
20	Rotatable Limit Switches, Models J-RR	17

NOTE: This user manual is for standard entertainment style hoists, referred to as D8 and D8+ units. Additional information for D8+ units is contained in a supplemental manual. The installation, inspection, maintenance and assembly, and general safety guidelines of this manual pertain to all models. D8+ units have additional features, specific brake and limit test procedures, and supplementary safety guidelines. See the addendum manual for the integration and use of D8+ hoists.

SPECIFICATIONS

The Lodestar Electric Chain Hoist is a highly versatile materials handling device that can be used to lift loads that are within its rated capacity. The mechanical features of these hoists include an alloy liftwheel, load-limiter, hardened steel chain guides, hardened steel load chain, hardened steel gear train, life-time lubrication, forged steel hooks, and lightweight aluminum frame. The electrical features included hoist-duty motor, rugged hoist brake, magnetic reversing contactor and voltage conversion board (dual voltage units).

Follow all instructions and warnings for inspecting, maintaining and operating this hoist.

The use of any hoist presents some risk of personal injury or property damage. That risk is greatly increased if proper instructions and warnings are not followed. Before using this hoist, each operator should become thoroughly familiar with all warnings, instructions, and recommendations in this manual.

Retain this manual for future reference and use.

Forward this manual to the hoist operator. Failure to operate the equipment as directed in the manual may cause injury.

Before putting hoist into service, fill in the information below. Refer to the hoist identification plate.

Model Number _____

Serial Number _____

Purchase Date _____

Voltage _____

Rated Load _____

TABLE 1. SPECIFICATIONS

ENTERTAINMENT-LODESTAR ELECTRIC CHAIN HOISTS

Single Speed 230/460-3-60 or 220/380-3-50 or 220/415-3-50

Model	Maximum Capacity		Lifting Speed 50 Hz units		Lifting Speed 60 Hz units		Nominal Power at the Hook		Shortest Distance Between Hooks		Net Weight*	
	Tonnes	kg	ft/min	m/min	ft/min	m/min	HP	KW	inches	mm	lbs	kg
B	1/4	250	13.3	4.06	16	4.88	1/2	0.373	16.9	429.3	59	27
C	1/4	250	26.7	8.13	32	9.75	1/2	0.373	16.9	429.3	59	27
F	1/2	500	13.3	4.06	16	4.88	1/2	0.373	16.9	429.3	60	28
J	1/2	500	26.7	8.13	32	9.75	1	0.746	18.1	459.7	111	50
JJ	1/2	500	53.3	16.26	64	19.51	2	1.49	18.1	459.7	119	54
L	1	1000	13.3	4.06	16	4.88	1	0.746	18.1	459.7	111	50
LL	1	1000	26.7	8.13	32	9.75	2	1.49	18.1	459.7	119	54
R	2	2000	6.7	2.03	8	2.44	1	0.746	25.8	655.3	124	56
RR	2	2000	13.3	4.06	16	4.88	2	1.49	25.8	655.3	135	61
RRS	2	2000	13.3	4.06	16	4.88	2	1.49	24.8	630	138	63

* Hoist with cords only (less chain and suspension). Net Weights are approximate and will vary depending on lift height and options selected. Please contact factory for actual hoist weight.

LODESTAR D8+

Lodestar D8+ chain hoists are hoists that can lift loads during the setup process with the hazard zone clear of people and are allowed to keep the load suspended above people without the need of a secondary suspension. These hoists are designed in full compliance with the requirements as specified in the German standard IGVW SQP2:10/2018.

Model	Load Capacity	FEM Class	Starts/Hr	Duty	Weigth With Rigid Suspension and 10' (3m) Lift		Chain Falls	Chain Size EN 818-7	Chain Minimum Breaking Strength		Chain Weight / Model Length of Lift	
	Tons (KG)				lb	kg		in. (mm)	lbf	kN	lb/ft	kg/m
F	1/2 (500)	2m	240	40%	79	35.8	1	1/4 (6.3)	10200	45.4	0.59	0.87
JJ	1/2 (500)	2m	240	40%	142	64.4	1	5/16 (7.9)	18000	80.1	0.94	1.40
L	1 (1000)	2m	240	40%	135	61.2	1	5/16 (7.9)	18000	80.1	0.94	1.40
LL	1 (1000)	2m	240	40%	142	64.4	1	5/16 (7.9)	18000	80.1	0.94	1.40
R	2 (2000)	2m	240	40%	158	71.7	2	5/16 (7.9)	18000	80.1	1.88	2.80
RR	2 (2000)	2m	240	40%	166	75.3	2	5/16 (7.9)	18000	80.1	1.88	2.80

ACCESSORIES

HOOK SUSPENSIONS

Swivel and rigid type hook suspensions (see Figure 1) are available for all Lodestar Electric Hoists. However, swivel type hook suspensions are normally recommended for most applications.

Figure 1. Hook Suspensions

LATCHLOK®HOOKS

CM's Latchlok hooks (see Figure 2) are available to replace the standard upper and lower hooks used on the Lodestar Electric Hoists.

Figure 2. Upper or Lower Latchlok® Hook

INSTALLATION

UNPACKING INFORMATION

When received, the hoist should be carefully inspected for damage which may have occurred during shipment or handling. Check the hoist frame for dents or cracks, the external cords for damaged or cut insulation, the control station for cut or damaged enclosure, and the load chain for nicks and gouges. If shipping damage has occurred, refer to the packing list envelope on the carton for claim procedure.

Before using the hoist, make sure the voltage change board is connected for the intended power supply the hoist is to be operated.

NOTE: See Electrical Installation instructions.

INSTALLING THE SUSPENSION (If Applicable)

A. SINGLE REEVED UNITS:

Remove the hook suspension and (2) suspension screws from the packaging. Place the suspension assembly into the recess on top of the hoist so that the adapter body follows the contour of the hoist. Insert the suspension screws through the holes in the adapter and hand thread these into the self-locking nuts enclosed in the hoist. The screws will turn freely into the nuts until the last 1/4" (6.35 mm) of travel, during which the resistance of the nut locking collar will be encountered. **DO NOT apply any type of lubricant to the threads of these screws.**

⚠ WARNING

USE OF IMPACT TOOLS (ELECTRIC OR PNEUMATIC) MAY CAUSE PREMATURE FAILURE OF ATTACHING HARDWARE.

Securely tighten the screws to the recommended seating torque using a 12 point socket 3/8" for Models B, C, and F and 1/2" for Models J, L, LL, R and RR and 3/16" hex bit socket for Model RRS."

For Model RRS: Remove the hook suspension, screw and locknut from the packaging. Slide the suspension assembly into the channel in the top of the hoist. Insert the locknut into the hex recess on the side of the suspension riser, insert the screw through opposite side and hand thread the screw into the self-locking nut. Tighten to recommended torque.

B. DOUBLE REEVED UNITS:

Remove the hook suspension, (2) suspension screws, (1) dead end pin, (1) washer, and (1) cotter pin from the packaging. It should be noted that the suspension includes a dead end bolt and block for supporting the dead end of the load chain as shown in Figure 3. Place the suspension assembly into the recess on top of the hoist. The dead end block should project through the bottom of the hoist with the pin hole and slot aligned to the underside of the hoist as shown in Figure 4.

If these are not aligned as shown, lift the head of the bolt from the hex recess in the adapter and turn the bolt and block assembly and reseat the bolt head to obtain the proper alignment. **DO NOT change the position of the dead end block on the bolt to attain this alignment.**

Check the position of the pin hole in the dead end block to make sure it has not been disturbed from its factory setting. The distance from the top of the pin hole to the bottom of the hoist should not exceed 7/16" (11.11 mm) for the Models R and RR. If the distance is not correct, adjust the position of the dead end block to obtain the proper distance (see Figure 3).

Now, insert the suspension screws through the holes in the adapter and hand thread these into the self-locking nuts enclosed in the hoist frame. **DO NOT apply any type of lubricant to the threads of these screws.** The screws will turn freely into the nut until the last 1/4" (6.35mm) of travel during which the resistance of the nut locking collar will be encountered. Securely tighten the screws to the recommended seating torque (see Table 11) using a 12 point socket 3/8" for Models B, C & F and 1/2" for Models J, L, LL, R and RR.

The dead end of the load chain is temporarily positioned (a few links from the end) by a wire tie. **DO NOT remove this tie before attaching the chain to the dead end block**.

⚠ WARNING

Using other than CM supplied high strength suspension screws to attach the suspension adapter to the hoist may cause the screws to break and allow the hoist and load to fall.

TO AVOID INJURY:

Use only the CM supplied suspension screws to attach the suspension to the hoist and hand torque these screws to the recommended seating torque as specified in tables 11a, 11b, 11c, & 11d.

DO NOT apply any type of lubricant to the threads of these screws. Lubricating the threads will reduce the effort to seat the screws and as a result, tightening the screws to the above recommended torque may break the screw, damage the suspension adapter, strip the nuts and/or damage the hoist frame.

SUSPENSION BOLT SHOULD BE REPLACED ANY TIME THE SUSPENSION IS REMOVED FROM THE HOIST.

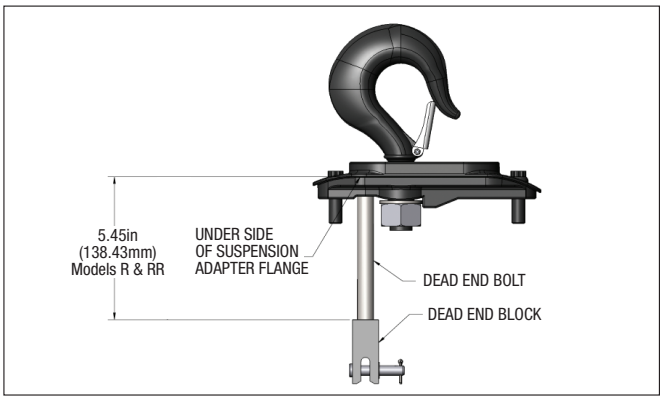

Figure 3. Double Reeved Suspension Assembly

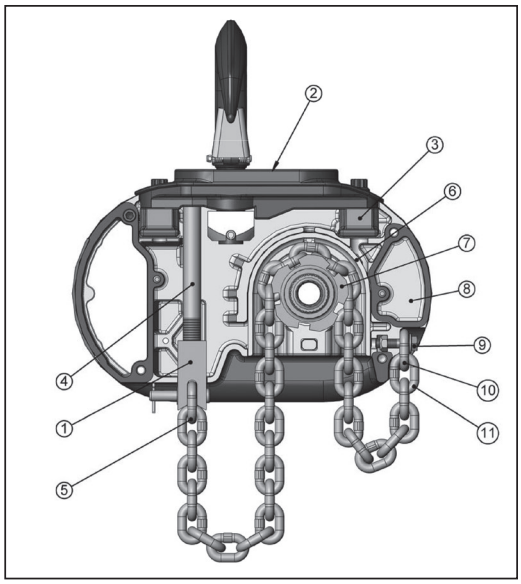

Figure 4. Suspension Components

(Chain Plate not shown for clarity.)

1. Dead end block
2. Suspension assembly
3. Suspension self-locking nut
4. Dead end bolt
5. Dead end link
6. Chain guide
7. Lift-wheel
8. Gear housing
9. Loose end screw
10. Loose end link
11. Loose end

ATTACHING LOAD CHAIN

SINGLE REEVED

1. Suspend the hoist from an adequate support.
2. If replacing existing chain, remove chain block kit from loose end of chain by removing the two (2) screws from opposing sides of the block. Remove lower hook assembly by removing the pin holding the chain into the assembly.
3. Using the connecting link, attach new chain to end of starter chain (existing chain if replacing) and feed through the chain plate, chain guides, and over the liftwheel. Feed enough chain through to be able to attach the chain block kit to the loose end of the chain by assembling the screws and nuts into the appropriate slots and tightening securely.
4. Attach the lower hook assembly to the appropriate end of the chain, by inserting the end link of the chain into the block, and securing the link with the pin.

DOUBLE REEVED

1. Suspend the hoist from an adequate support.
2. Insert the last link of the load chain into the dead end block and secure it with the dead end pin, washer, and cotter pin furnished with the upper suspension.
3. Ensuring there are no twists in the load chain, feed the other end of the load chain through the lower hook block opening, around the sheave wheel and back up to the bottom of the hoist.
4. Using the connecting link, attach new chain to end of starter chain (existing chain if replacing) and feed through the chain plate, chain guides, and over the liftwheel. Feed enough chain through to be able to attach the chain stop kit to the loose end of the chain by assembling the screws and nuts into the appropriate slots and tightening securely.

CHECKING FOR TWIST IN LOAD CHAIN MODELS R, RR

The best way to check for this condition is to run the lower hook, without a load, up to within about 2 feet (.61 Meters) of hoist. If the dead end of the chain has been properly installed, a twist can occur only if the lower hook block has been capsized between the strands of chain. Reverse capsize to remove twist.

LOWER HOOK BLOCK PIN

When removing or installing the lower hook pin, care must be taken so as to prevent damaging the pin and/or hook block. These pins are tapered groove pins and as a result, they can only be removed in one direction. To remove the pin, a V-Block, drift and hammer (or slow acting press) are required. The drift should be the same diameter as the pin (5/16” diameter (7.94mm) for Models B, C & F and 3/8” (9.52mm) diameter for Models J, JJ, L, LL, R, & RR, and (7/16" diameter (11.11mm) for Model RRS and it should be placed on the small end of the pin. The small end of the pin is the end opposite the end on which the 3 grooves are visible. Place the hook block in the V-Block and drive the pin out using the drift and a hammer or slow acting press.

To re-install the pin, the parts must be arranged the same as they were when the pin was removed. To do this, use the small end of the pin as a gage. First check the holes in the hook block body and determine which hole is the largest. Place the hook body in the V-Block with the larger hole on top. Next, check each end of the hole in the lower hook chain block and determine which end is the largest. Place the chain in the slot of the chain block and insert the chain block, with the large hole on top, into the hook block body. Align the holes in the hook block body with the hole in the chain block and insert the small end of the pin in the hole. Push the pin in by hand until it stops and then use a hammer or slow acting press to drive the pin into position so that the end of the pin is flush with the outside surface of the hook block body.

⚠ WARNING

Use of improper lower hook chain block pin as well as improper installation of the pin can cause the pin to break and allow the load to fall.

TO AVOID INJURY AND PROPERTY DAMAGE:

Use only CM supplied, special high strength lower hook chain block pin to attach the chain to the lower hook block and install the pin as directed above.

CHAIN STOP KIT

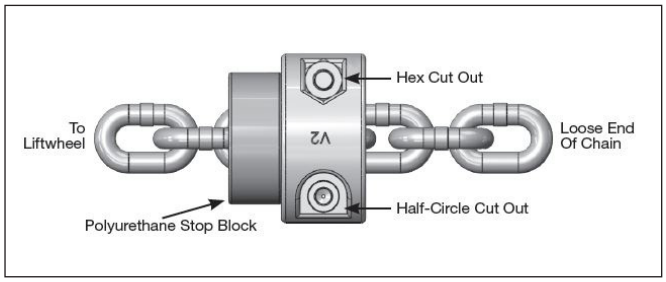

Figure 5. Chain Stop

Place polyurethane stop block over loose end of chain and slide past desired spot that the chain stop is to be located. Place one half of chain stop on chain. Then place other half on top of the first half of chain stop. (Note: Be sure that the half circle cut out side of one stop block half is aligned with hex cut out side.) Place one (1) nut into hex cutout insert one (1) screw with one (1) lock washer through hole opposite nut and loosely tighten. Repeat for second connection. Tighten both screw connections to ensure that they do not come loose.

CUTTING CHAIN

CM®Load chain is hardened and it is difficult to cut. The following methods are recommended when cutting a length of new chain from stock or cutting off worn chain.

1. Use a grinder and nick the link on both sides (Figure 6), then secure the link in a vise and break off with a hammer.
2. Use a 177.8 mm (7 inches) minimum diameter by 3.175 mm (1/8 inch) thick abrasive wheel (or type recommended by wheel supplier) that will clear adjacent links.
3. Use a bolt cutter (Figure 7) similar to the H.K. Porter No. 0590MTC with special cutter jaws for cutting hardened chain (25.4mm-1 inch) long cutting edge.

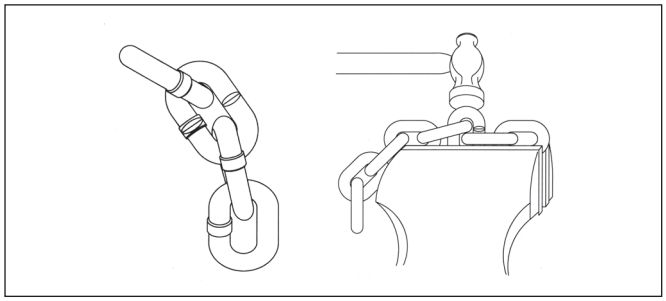

Figure 6. Cutting Chain by Nicking

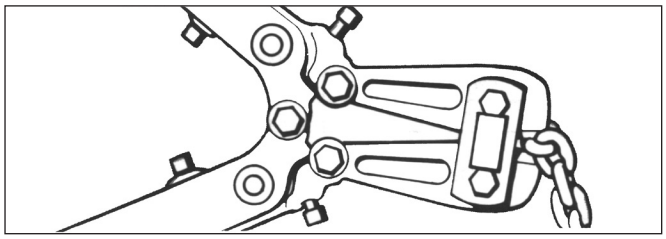

Figure 7. Cutting Chain with a Bolt Cutter

⚠ WARNING

Cutting Chain Can Produce Flying Particles.

TO AVOID INJURY:

- Wear Eye Protection.
- Provide A shield Over Chain to Prevent Flying Particles.

EXTERNAL CHAIN PLATE

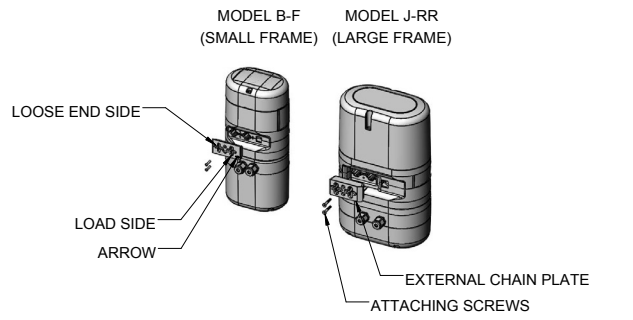

Figure 8. Chain Plate

Models	External Chain Plate Kit
B-F	10001440
J, JJ, L, LL	10001441
R, RR	10001997

POWER SUPPLY AND ELECTRICAL CONNECTIONS

The hoist should be connected to a branch circuit which complies with the requirements of the National Electrical Code and applicable local codes.

It is recommended, especially for a single phase hoist with a (1) horsepower motor (.75 Kilowatts), that a line of adequate capacity be run directly from the power supply to the hoist to prevent problems with low voltage and circuit overloads.

For grounding of the hoist, the power cord includes a grounding conductor (green yellow, G-Y). Before connecting the hoist to the power supply, check that the power to be used agrees with the position of voltage change plug on the voltage change board. The nominal hoist voltage rating corresponding to the voltage range given on hoist identification plate is:

Dual Voltage Units					
Low	Range	Nominal Volts	High	Range	Nominal Volts
	220-240	230		380-415	400
				440-480	460

THREE PHASE HOIST

Unless ordered on a special basis, all single speed/dual voltage (230/460-3-60, 220/380-3-50 and 220/415-3-50) hoists are factory arranged to operate on 460-3-60 (or 380-3- 50 or 415-3-50).

VOLTAGE CHANGE BOARD

A voltage change board is provided to easily and quickly change from 460 to 230 (or 380 to 220 or 415 to 220) volt operation. The voltage change board shown in Figure 9 is located in the hoist as shown in Figure 10. The voltage change board is color coded to indicate high and low voltage connections. Connecting the 9 and 12 pin plugs into the "Red" voltage change board receptacles will connect the hoist for high voltage (380-3-50, 415-3-50 or 460-3-60). To change the hoist voltage to low voltage (208-3- 60, 220-3-50 or 230-3-60) simply remove the 9 and 12 pin plugs from the "Red" receptacles and insert same into the "White" receptacles located on the voltage change board. Be sure to make a notation of the new hoist voltage on the tag attached to the power cord.

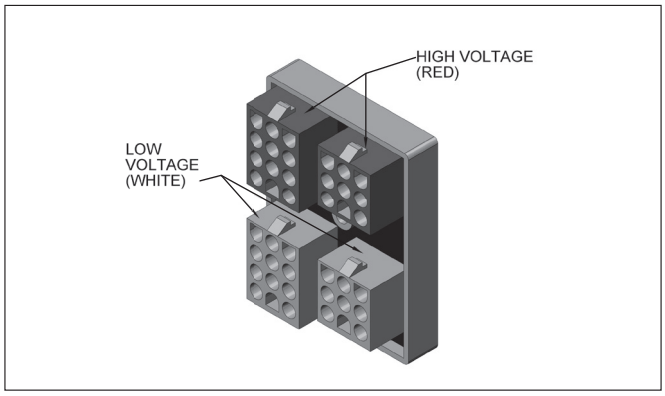

Figure 9. Voltage Change Board

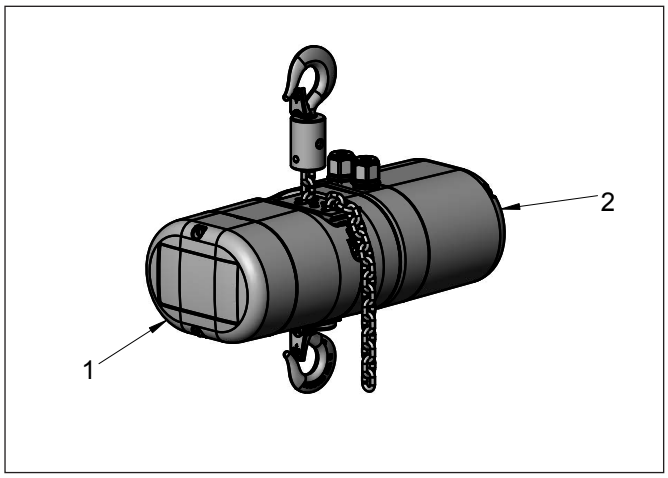

Figure 10. Location of Components

Both the voltage conversion board and PCB assembly are located under back frame cover (1) for Models A-H and under motor housing cover (2) for Models J-RRT.

PRINTED CONTACTOR BOARD

Some dual-voltage Lodestar hoists are equipped with a printed circuit board assembly shown below in Figure 11. The board has two-12 pin receptacles that correspond to either high or low voltage operation. To change the hoist operating voltage from high voltage (380-3-50, 415-3-50, or 460-3-60) to low voltage (208-3-60, 220-3-50, or 230-3-60) simply remove the 12-pin plug from the receptacle labeled "460V Motor" and insert the plug in the receptacle labeled "230V Motor." Be sure to make a notation of the new hoist voltage on the tag attached to the power cord.

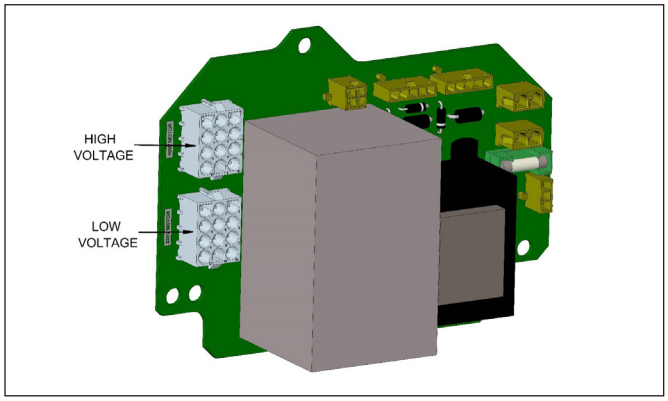

Figure 11. Printed Contactor Board

PROPER PHASING

Since the motor in a three phase hoist can rotate in either direction depending on the manner in which it is connected to the power supply. The direction of hook movement must be checked prior to each usage.

NOTE: Serious damage can result if the hook is run to the upper or lower limit of travel with the hook operating in a direction opposite to that indicated by the control station. Therefore, proceed as follows:

1. Make temporary connections at the power supply.
2. Operate ↑ (UP) control momentarily. If hook raises, connections are correct and can be made permanent.
3. If hook lowers, it is necessary to change direction by inter-changing the Grey lead and the Black lead of hoist power supply. Under no circumstances should the internal wiring of the control device or hoist be changed to reverse hook direction. The wiring is inspected and tested before leaving the factory.

Do not force the Lodestar Load-limiter to compensate for improperly adjusted limit switches or reverse voltage phasing.

⚠ WARNING

Allowing the hook block to run into the bottom of the hoist when raising a load or allowing the chain to become taut between the loose end screw and the frame when lowering a load may break the chain and allow the load to drop.

TO AVOID INJURY:

Do not allow the hook block to contact the bottom of the hoist or the loose end chain to become taut.

CHECKING FOR ADEQUATE VOLTAGE AT HOIST

The hoist must be supplied with adequate electrical power in order to operate properly. For proper operation, the voltage, (measured at the hoist end of the standard power cord with the hoist operating in the ↑, up direction with full load) must be as indicated in the table below.

Table 2. Voltage Requirements

NOMINAL VOLTAGE	SOURCE VOLTAGE RANGE	MINIMUM RUNNING VOLTAGE
115-1-60	110-120	99
230-1-60	220-240	198
230-3-60	208-240	188
460-3-60	440-480	396
220-3-50	200-240	171
380-3-50	350-410	365
415-3-50	380-440	342

Table 3. Maximum Circuit Protector Rating

Model -	IMaximum Circuit Protector Rating
F	20 AMP
L	20 AMP
LL	20 AMP
JJ	20 AMP
R	20 AMP
RR	20 AMP

SIGNS OF INADEQUATE ELECTRICAL POWER (LOW VOLTAGE) ARE:

- Noisy hoist operations due to brake and/or contactor chattering.
- Dimming of lights or slowing of motors connected to the same circuit.
- Heating of the hoist motor and other internal components as well as heating of the wires and connectors in the circuit feeding the hoists.
- Failure of the hoist to lift the load due to motor stalling.
- Blowing of fuses or tripping of circuit breakers.

To avoid these low voltage problems, the hoist must be connected to an electrical power supply system that complies with the National Electrical Code and applicable local codes. This system must also provide (slow blow fuses or inverse-time type circuit breakers) and provisions for grounding the hoist.

⚠ WARNING

Failure to properly ground the hoist presents the danger of electric shock.

TO AVOID INJURY:

Permanently ground the hoist as instructed in this manual.

Low voltage may also be caused by using an undersized cord and/or connectors to supply power to the hoist. Table 3 should be used to determine the size wires in the extension cord in order to minimize the voltage drop between the power source and the hoist.

Table 4. Extension Cords

LENGTH OF EXTENSION CORD	THREE PHASE HOISTS	SINGLE PHASE HOIST
	MINIMUM WIRE SIZE	MINIMUM WIRE SIZE
UP TO 50 FEET (15.2 m)	#16 AWG (1.5 mm^2)	#14 AWG (2.5 mm^2)
80 FEET (24.4 m)	#16 AWG (1.5 mm^2)	#12 AWG (4 mm^2)
120 FEET (36.7 m)	#14 AWG (2.5 mm^2)	#10 AWG (6 mm^2)
200 FEET (61.0 m)	#14 AWG (2.5 mm^2)	Contact Factory
For runs beyond 200 Ft (61 m) contact factory.		

⚠ WARNING

Failure to provide a proper power supply system for the hoist may cause hoist damage and offers the potential for a fire.

TO AVOID INJURY:

Provide each hoist with a 20 amp, minimum, overcurrent protected power supply system per the National Electrical Code and applicable local codes as instructed in this manual.

Remember, operation with low voltage can void the CM repair/replacement policy. When in doubt about any of the electrical requirements, consult a qualified electrician.

⚠ WARNING

TO AVOID INJURY:

Always disconnect the power cord from the power supply system and lockout/tagout disconnecting means before servicing the hoist. Working in or near exposed energized electrical equipment presents the danger of electric shock.

CHECKING LIMIT SWITCH OPERATION IF HOIST IS EQUIPPED

With hoists that are equipped with an adjustable screw limit switch, the limit switch will automatically stop the hook at any predetermined point when either hoisting or lowering.

⚠ WARNING

Failure to properly ground the hoist presents the danger of electric shock.

TO AVOID INJURY:

Permanently ground the hoist as instructed in this manual.

Operate hoist over the entire length of its rated lift, checking upper and lower limit switches for correct operation as follows:

1. Press (UP) control and raise the lower hook until top of hook block is about 12 inches (305 mm) below the hoist.
2. Cautiously continue raising the hook until the upper limit switch stops the upward motion. The upper limit switch is set at the factory to stop the hook block 8 links from the bottom of all hoists.
3. If adjustment is necessary, see page 15.
4. Press(DOWN) control and cautiously lower hook until lower limit switch stops the downward motion. On hoist operated in the motor down orientation, maintain a minimum of 24" (610mm) of chain freely hanging over the side of the hoist.
5. If adjustment is necessary, see page 15.

   NOTE: If the hoist is equipped with a chain container/bag, reset the upper and lower limit switches as indicated on page 15.

   Under no condition should the hook block or load be permitted to come in contact with the chain container/bag. If contact is made, the function of the chain container can be interfered with and its fasteners imperiled.

   NOTE: When chain bag is filled to capacity the bag must be no more than 75% filled.

OPERATING INSTRUCTIONS

GENERAL

1. The Load-limiter is designed to slip on an excessive overload. An overload is indicated when the hoist will not raise the load. Also, some clutching noise may be heard if the hoist is loaded beyond rated capacity. Should this occur, immediately release the ↑ (UP) control to stop the operation of the hoist. At this point, the load should be reduced to the rated hoist capacity or the hoist should be replaced with one of the proper capacity. When the excessive load is removed, normal hoist operation is automatically restored.

CAUTION: The Load-limiter is susceptible to overheating and wear when slipped for extended periods. Under no circumstance should the clutch be allowed to slip for more than a few seconds.

Due to the above, a hoist equipped with a Load-limiter is not recommended for use in any application where there is a possibility of adding to an already suspended load to the point of overload. This includes dumbwaiter installations, containers that are loaded in mid-air, etc.

HOIST

1. Before picking up a load, check to see that the hoist is directly overhead.
2. WHEN APPLYING A LOAD, IT SHOULD BE DIRECTLY UNDER HOIST OR TROLLEY. AVOID OFF CENTER LOADING OF ANY KIND.
3. Take up a slack load chain carefully and start load easily to avoid shock and jerking of hoist load chain. If there is any evidence of overloading, immediately lower the load and remove the excess load.
4. DO NOT allow the load to swing or twist while hoisting.
5. DO NOT allow the load to bear against the hook latch.

SAFE OPERATING INSTRUCTIONS AND PROCEDURES

For safety precautions and a list of Do's and Do Not's for safe operation of hoists, refer to page 3.

1. Permit only competent personnel to operate unit.
2. When preparing to lift a load, be sure that the attachments to the hook are firmly seated in hook saddle. Avoid off center loading of any kind, especially loading on the point of hook.
3. Do not allow the load to bear against the hook latch. The latch is to help maintain the hook in position while the chain is slack before taking up slack chain.
4. Do not wrap the load chain around the load and hook onto itself as a choker chain. Doing this will result in:
   a. The loss of the swivel effect of the hook which could result in twisted chain and a jammed lift wheel.
   b. The upper limit switch, if so equipped, is bypassed and the load could hit the hoist.
   c. The chain could be damaged at the hook.
5. Before lifting load, check for twists in the load chain. On double reeved units A twist can occur if the lower hook block has been capsized between the strands of chain. Reverse the capsize to remove twist.
6. On single reeved chain hoist used in conjunction with head blocks and ground support systems, check for twists between the hoist and head block. Twisted load can result in a jammed liftwheel.
7. Do not use this or any other overhead materials handling equipment for lifting persons.
8. Do not load hoist beyond the rated capacity shown on hoist identification plate or on the hoist motor housing cover or hoist back frame cover. Overload can cause immediate failure of some load-carrying part or create a defect causing subsequent failure at less than rated capacity. When in doubt, use the next larger capacity CM Lodestar Hoist.
9. Warn personnel of your intention to lift a load in the area. Tie off the load with auxiliary chains or cables before access to the area beneath the load is permitted.
10. Do not operate hoist at unusual extremes of ambient temperatures above 150° F (60° C) or below 0° F (-17° C).

STAGE OPERATION

Hoists can be removed from the road case by manual lifting, or rigged while still in the case and power out.

Manual Lifting – It is recommended that two people be used to the lift the hoist from the road case. The hoist can be lifted by grasping the handles (if fitted), the end covers, or the load chain. Never pull on the electrical cable(s) even if equipped with an external strain relief.

When placed on the floor the hoist should be positioned on its side with the chain pulled away to allow the chain to enter the hoist without jamming if the hoist is to be operated.

⚠ WARNING

Never operate a Lodestar hoist while standing on its end as in the figure to the right.

The hoist may tip over and damage the casing, but more importantly it will cause the Lodestar to "drag" against its brake putting extra strain on the electric motor.

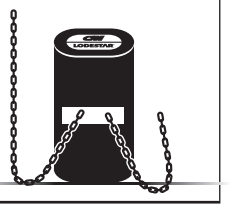

When running chain "in" the hoist should be laid on its side on the ground / stage with the chain stretched out along the ground. The "dead" end side of the hoist should be on the floor. With the hoist

in this position, gravity will hold the chain and allow it to run freely through the hoist and help unravel any twists and prevent chain jam.

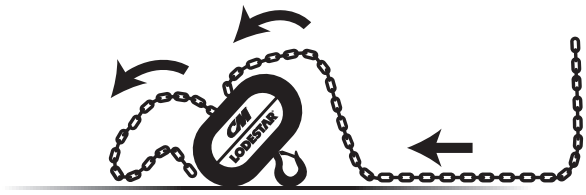

When running chain “out”, the same principal should be adopted but this time with the “dead” end side of the hoist facing up. Again, this will prevent twists causing chain jam.

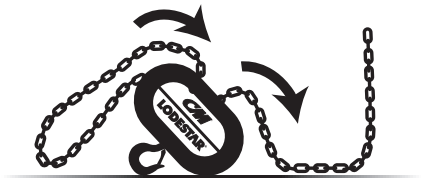

When using Lodestar hoists with 2 chain falls (for example on Model R or RR) you should check for twists in the chain. The best way to check for this condition is to run the lower hook up (without load) to within about 24 inches (600mm) of the hoist when any twists will become apparent, if the chain has been properly installed a twist can only occur if the lower block has been capsized between the strands of chain – reverse capsize to remove twists.

- Before moving a truss use a verbal warning such as “truss moving”. Always “bump” the hoists before lifting or lowering. This will do 2 things:
  - It will act as a warning to people around that the rig is about to move should they not have heard your warning.
  - Any problem with rigging or reeving will show up in this “bumping through” – always leave enough chain to “bump” without running out of chain.
- Always have one person in charge of moving the rig, but as many “spotters” as necessary to watch any hoists the main person cannot see.
- When replacing the hoist in the road case, the chain should be run to the lower limit then operated in the up direction for about 6 (152 mm) to 8 (203 mm) inches. This should be done because:
  - The ceiling height may be lower in this venue than the next. If you run all the chain out, this assures enough chain for the rigger to hit the point in the next venue regardless of the height.
  - Running off the lower limit prevents any damage to the micro switch due to vibration as the hoist travels to the next venue.

⚠ WARNING

Allowing the load to bear against the hook latch and/or hook tip can result in loss of load.

TO AVOID INJURY:

Do not allow the load and/or attachments to bear against the hook latch and/or hook tip. Apply load to hook bowl or saddle only.

11. Take up a slack load chain carefully and start load easily to avoid shock and jerking of hoist load chain. If there is any evidence of overloading, immediately lower the load and remove the excess load.
12. When lifting, raise the load only enough to clear the floor or support and check to be sure that the attachments to the hook and load are firmly seated. Continue lift only after you are assured the load is free of all obstructions.
13. Do not allow the load to swing or twist while hoisting.
14. Never operate the hoist when flammable materials or vapors are present. Electrical devices produce arcs or sparks that can cause a fire or explosion.
15. **STAY ALERT!** Watch what you are doing and use common sense. Do not use the hoist when you are tired, distracted or under the influence of drugs, alcohol or medication causing diminished control

INSPECTION

To maintain continuous and satisfactory operation, a regular inspection procedure must be initiated to replace worn or damaged parts before they become unsafe. Inspection intervals must be determined by the individual application and are based on the type of service to which the hoist will be subjected.

The type of service to which the hoist is subjected can be classified as "Severe, "Normal", "Stand-by", "Rental", or "Out of Service".

Stand-by Service: Hoist operates 25 or fewer days a year, but at least once.

Rental Service: Hoist is operated on an irregular schedule determined by rental use.

Out of Service: Hoist does not operate for a period of a year or longer.

Normal Service: Hoist operates 200 or fewer days a year, but more than 25.

Severe Service: Hoist operates in excess of 200 days a year.

Two classes of inspection - frequent and periodic - must be performed.

Frequent Inspections: These inspections are visual examinations by the operator or other designated personnel. Records of such inspections are not required. The frequent inspections are to be performed monthly for normal service, weekly to monthly for heavy service, and daily to weekly for severe service, and they should include those items listed in Table 4.

Periodic Inspections: These inspections are visual inspections of external conditions by an appointed person. Records of periodic inspections are to be kept for continuing evaluation of the condition of the hoist. Periodic inspections are to be performed yearly for normal service, semi-annually for heavy service and quarterly for severe service, and they are to include those items listed in Table 4.

CAUTION: Any deficiencies found during inspections are to be corrected before the hoist is returned to service. Also, the external conditions may show the need for disassembly to permit a more detailed inspection, which, in turn, may require the use of nondestructive type testing.

PREVENTIVE MAINTENANCE

In addition to the above inspection procedure, a preventive maintenance program should be established to prolong the useful life of the hoist and maintain its reliability and continued safe use. The program should include the periodic and frequent inspections with particular attention being paid to the lubrication of the various components using the recommended lubricants (see online resources).

HOOK INSPECTION

Hooks damaged from chemicals, deformations or cracks, or any visibly apparent bend or twist from the plane of the unbent hook, excessive opening or seat wear must be replaced. Also, hooks that are opened and allow the latch to not engage the tip must be replaced. Any hook that is twisted or has excessive throat opening indicates abuse or overloading of the unit. Inspect other load sustaining parts, hook block screws, load pins and hook block bodies for damage.

On latch type hooks, check to make sure that the latch is not damaged or bent and that it operates properly with sufficient spring pressure to keep the latch tightly against the tip of the hook and allow the latch to spring back to the tip when released. If the latch does not operate properly, it should be replaced. See Figure 12 to determine when the hook must be replaced.

SUSPENSION BOLTS SHOULD BE REPLACED ANY TIME THE SUSPENSION IS REMOVED FROM THE HOIST.

Table 4. INSPECTION TABLE						
	Service Classifications					Item
	Severe	Normal	Stand By	Rental	Out of Service	
Frequent Inspections	Weekly to Monthly	Monthly	Every 3 Months	Prior to Next Use or Rental	Prior to Reintroduction into Service	Hoist braking system for proper operation
						Hooks and attachment hardware for correct assembly, damage, cracks, twists, excessive throat openings, latch engagement, and latch operation
						Load chain for adequate lubrication, signs of wear, damaged links, corrosion, or foreign matter
						Load chain for proper reeving and twists
						Limit switches for function, if equipped
Periodic Inspections	Every 3 Months	Yearly	Yearly	Yearly		All items listed in Inspection Table for frequent inspections.
						Evidence of loose screws, bolts or nuts.
						Evidence of worn, corroded, cracked or distorted hook block body, suspension screws, gears, bearings, chain dead end and chain pin.
						Evidence of damage or excessive wear of the lift wheel and hook block sheave chain pockets.
						Link by link inspection of the chain for evidence of excessive interlink wear and damage.
						Evidence of chain guide wear or damage where the chain enters the hoist.
						Evidence of excessive wear and/or damage of brake parts. Proper brake adjustment.
						If the hoist is equipped with a reversing contactor, inspect contactors for functionality and free operation of the interlock.
						Electrical cords, grommets, connectors, cables, and control station enclosure (if applicable) for damage or wear.
						Check bearings for excessive wear or damage.
						Suspension components for damage, cracks, wear and correct operation.
						Inspect all lower hook retaining nuts and pins for damage and secure fit.
						Evidence of lubricant leakage.

HOOK REPLACEMENT CRITERIA

Based on ASME B30.10, hooks shall be removed from service if damage such as the following is visible and shall only be returned to service when approved by a qualified person:

1. Missing or illegible rated load identification or illegible hook manufacturers' identification or secondary manufacturer's identification.
2. Excessive pitting or corrosion. Cracks, nicks, or gouges.
3. Wear--any wear exceeding 10% of the original section dimension of the hook or its load pin.
4. Deformation--any visibly apparent bend or twist from the plane of the unbent hook.
5. Throat opening-any distortion causing an increase in the throat opening of 5%, not to exceed 1/4" (6mm).
6. Inability to lock- any self-locking hook that does no lock.
7. Inoperative latch, any damaged latch or malfunctioning latch that does not close the hook's throat.
8. Thread wear, damage, or corrosion.
9. Evidence of excessive heat exposure or unauthorized welding.
10. Evidence of unauthorized alterations such as drilling, machining, grinding, or other modifications.

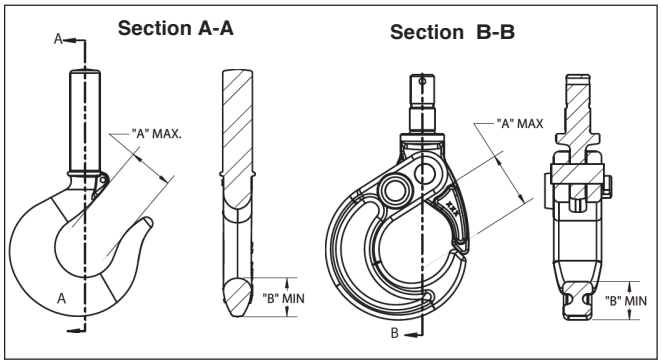

Figure 12. Hook Inspection

Table 5. Hook Dimensions

Models	Latch Type Hook		Latchlok® Hook	
	"A" Max	"B" Min	"A" Max	"B" Min
B, C & F	1.19" (30.2mm)	.91" (23.1mm)	1.48" (37.7mm)	.75" (18.8mm)
J, JJ, L, & LL	1.31" (33.3mm)	1.08" (27.5mm)	1.48" (37.7mm)	.75" (18.8mm)
R, RR & RRS	1.50" (38.1mm)	1.43" (36.2mm)	1.92" (48.8mm)	.94" (23.9mm)

INSPECTING THE LOAD CHAIN:

The chain must be inspected at regular intervals, with a minimum of once annually. As the frequency of use increases, the time intervals between inspections must be reduced. During inspection, the chain link must be examined along their entire length, including the hidden parts. If the lifting equipment is frequently used with a constant lifting distance or in other words the switch from upward to downward often takes place in the same area, a particularly thorough inspection and lubrication is required in that area. Worn chain can also be an indication of worn hoist components. For this reason, the hoist's chain guides, hook blocks and liftwheel (sprocket) should be examined for wear and replaced as necessary when replacing chain.

1. Check to see if chain is dirty or poorly lubricated.
2. Clean the chain with a non-caustic/non-acid type solvent and make a link by link inspection for wear or cracks in the links, twisted or deformed links. Chain with any one of these defects must be replaced.
3. Slack the portion of the chain that normally passes over the lift-wheel (sprocket) or idler sprocket on multi-reeved hoist. Examine the chain links for wear (see Figure 13). If the wire diameter anywhere on the link measures less than 90% of the nominal wire diameter, the chain must be replaced.

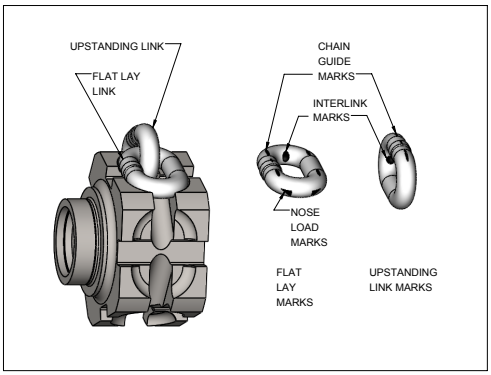

Figure 13. Chain Wear Areas

4. Based upon ASME B30.16, should also be checked for elongation. Select an unworn, unstretched length of the chain (at the slack end for example). Suspend the chain vertically under tension and using a knife blade caliper type gauge, measure the outside length of any convenient number of links, 11 is recommended as shown in Figure 15. Measure the same number of links in the used sections and calculate the percentage in increased length. The chain should be replaced if the length of the used portion is more than 1.5% longer than the unused portion of the chain. Also, if the pitch of any individual link has elongated by more than 5%, the chain should be replaced.

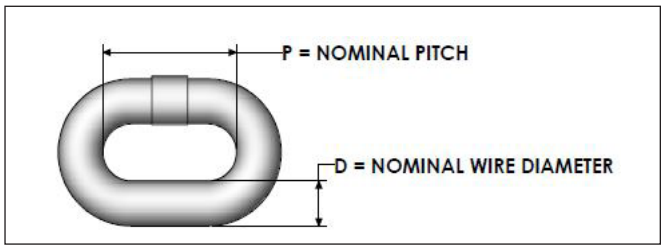

Figure 14. Chain Dimensions

Table 6. Chain Dimensions

Models	Pitch (P)	Diameter (D)
B, C & F	.745" (18.9mm)	.250" (6.3mm)
J, JJ, L, LL, R, & RR	.858" (21.8mm)	.312" (7.9mm)
RRS	1.18" (30.0mm)	.394 (10.0mm)

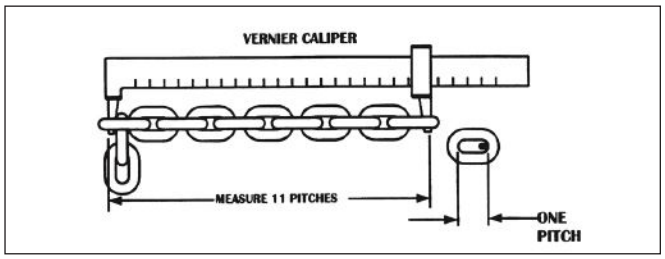

Figure 15. Gaging Load Chain Wear

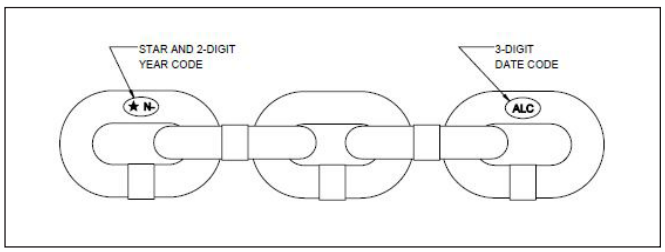

Figure 16. Chain Embossing

IMPORTANT: Do not use replaced chain for other purposes such as lifting or pulling. Load chain may break suddenly without visual deformation. For this reason, cut replaced chain into short lengths to prevent use after disposal.

REMOVAL AND INSTALLATION OF LOAD CHAIN

⚠ WARNING

Improper installation (reeving) of the load chain can result in a dropped load.

TO AVOID INJURY/DAMAGE:

- Verify use of proper size and type of hoist load chain for specific hoist.
- Install load chain properly as indicated below.

USE ONLY CM EN (formerly DIN) OR STAR (★) GRADE LOAD CHAIN AND CM REPLACEMENT PARTS. USE OF OTHER CHAIN AND PARTS MAY BE DANGEROUS AND VOIDS FACTORY WARRANTY.

Hoist load chain can be installed by any one of several methods.

The first method is recommended when replacing severely worn load chain and requires disassembling the hoist. Method 2 does not require hoist disassembly and is the recommended method for initial installation of load chain. Method 3 requires only partial disassembly.

METHOD #1

a. Disconnect hoist from power supply.

b. Remove back frame cover and disengage the limit switch guide plate from the traveling nuts, see page 16 or 17.

c. Detach loose end of load chain from hoist frame, see Figure 3. Also, on single reeved models, detach the lower hook block from the load chain. On double reeved models R & RR unfasten the dead end side of load chain.

d. Continue to disassemble the hoist and inspect the liftwheel, chain guides, motor housing and gear housing which if worn or damaged may cause premature failure of the new chain.

e. If the liftwheel pockets, in particular the ends, are worn or scored, replace liftwheel. If chain guides and housing are worn, cracked or damaged these parts should also be replaced.

f. Reassemble hoist with the new load chain inserted over the liftwheel. Position chain with the weld on upstanding links away from liftwheel and leave only one foot of chain hanging free on loose end side. On double reeved models, make certain that the new load chain is free of twists.

g. Attach the loose end link to chain and connect it to the hoist frame with the loose end screw, washer and lockwasher, see Figure 3. BE CERTAIN THERE IS NO TWIST.

h. For single reeved models, attach the hook block to load chain and proceed to step K.

i. For double reeved models, run the hoist (UP) until only 914.4 mm (36” Inches) of chain remains on dead end side. This will minimize the chance of introducing a twist between hook block and hoist. Allow the chain to hang free to remove twists.

j. Using a wire as a starter, insert the chain, flat link first, into lower hook block (upstanding links will have weld toward sheave) and pull through. Insert last link into slot in dead end block making certain that no twist exists in the reeving at any point. Assemble dead end pin, washer and cotter pin as shown in Figure 3.

k. Adjust limit switches as describe in Table 3, page 16. If the new chain is longer than the old, check to be sure limit switch will allow for new length of lift. In the event maximum adjustment does not allow entire length of lift, check with CM® for modification if necessary.

⚠ WARNING

Do not allow hook block to hit hoist or allow load chain to become taut between loose end screw and frame or else serious damage will result. If hook block should inadvertently hit the hoist-the hoist frames, load chain and hook block should be inspected for damage before further use.

METHOD #2

Treat the old load chain in hoist as a “starter chain” and proceed with steps from Method #1, a, b, c and h thru k. If a starter chain is used, the loose end link (two links required for double reeved models) can serve as a temporary coupling link to connect together the starter chain in the hoist and the new load chain to be installed. Then, under power, reeve the new load chain through the liftwheel area, replacing the starter chain in unit. Run enough chain through to attach loose end link to hoist frame.

CAUTION: For double reeved models, be sure to disconnect one of the loose end links from the load chain before attaching it to the hoist.

METHOD #3

a. First proceed with Steps 1a, b & c from Method #1.

b. Then, carefully run the load chain out of the hoist.

c. Disconnect hoist from power supply.

d. Remove the electric brake assembly.

e. Rotate the brake hub by hand, at the same time feeding the load chain into and through liftwheel area with hoist upside down or using a wire to pull the load chain up onto the liftwheel as explained in Method #1 step 1f.

f. Refer to Method #1 steps g thru j above to complete the installation.

PARTS STAR BY COLUMBUS McKINNON

⚠ WARNING

Using "Commercial" or other manufacturer's parts to repair the CM Lodestar Hoists may cause load loss.

TO AVOID INJURY:

Use only CM supplied replacement parts. Parts may look alike but CM parts are made of specific materials or processed to achieve specific properties

ORDERING INSTRUCTIONS

The following information must accompany all correspondence orders for replacement parts:

1. Hoist Model Number from identification plate.
2. Serial number of the hoist stamped below identification plate.
3. Voltage, phase, hertz from the identification plate.
4. Length of lift.
5. Part number of part from parts list.
6. Number of parts required.
7. Part name from parts list.

NOTE: When ordering replacement parts, it is recommended that consideration be given to the need for also ordering such items as gaskets, fasteners, insulators, etc. These items may be damaged or lost during disassembly or just unfit for future use because of deterioration from age or service.

MAINTENANCE

LOAD-LIMITER

The Load-limiter should operate for the normal life of the hoist without service. The device has been calibrated at the factory for a specific model of hoist. For proper overload protection, be sure before installing a Load-limiter that it is correct for the unit. This is mechanical load protection only and contains no electrical sensing.

Models	Load-limiter Part Number	Load-limiter ID # (marked on Protecor)
B	C00000240	240
C, F	C00000241	241
J, L, R	C00000242	242
JJ, LL, RR, & RRS	C00000243	243

For appropriate D8+ Load-Limiter see parts blow-out.

HOIST LUBRICATION

⚠ WARNING

The lubricants used in and recommended for the Lodestar Hoist may contain hazardous materials that mandate specific handling and disposal procedures.

TO AVOID INJURY:

Handle and dispose of lubricants only as directed in applicable material safety data sheets and in accordance with applicable local, state and federal regulations.

GEARS

NOTE: To assure extra long life and top performance, be sure to lubricate the various parts of the Lodestar Hoist using the lubricants specified in lubrication section. If desired, these lubricants may be purchased from CM. Refer to spare parts section for information on ordering the lubricants.

The gearbox is packed at assembly with grease and should not need to be renewed unless the gears have been removed from the housing and degreased.

If the gears are removed from the housing, wipe the excess grease off with a soft cloth and degrease the gears and housings. Upon reassembly, add grease to gears and housing. Fully coat gear teeth and pack gear box, Models B, C & F require 7 fl. oz. of grease. Models J, JJ, L, LL, R, and RR require 15 fl. oz. of grease. For Model RRS hoist: A total of 22 fluid ounces of grease.

- The limit switch gears are of molded nylon and require no lubrication.
- Apply a light film of machine oil to the limit switch shaft threads at least once a year.

BEARINGS

- All bearings and bushings, except the lower hook thrust bearing, are pre-lubricated and require no lubrication. The lower hook thrust bearing should be lubricated at least once a month.

CHAIN GUIDES, LIFTWHEEL AND LOWER SHEAVE WHEEL

- When the hoist is disassembled for inspection and/or repair, the chain guides, lower sheave wheel (on double chain units) and liftwheel must be lubricated with Lubriplate Bar and Chain Oil 10-R (Fiske Bros. Refining Co. or equivalent) prior to reassembly. The lubricant must be applied in sufficient quantity to obtain natural runoff and full coverage of these parts.

LOAD CHAIN

A small amount of lubricant will greatly increase the life of load chain. **Do not allow the chain to run dry.**

Keep it clean and lubricate at regular intervals with Lubriplate Bar and Chain Oil 10-4 (Fiske Bros. Refining Co.) or equal lubricant. Normally, weekly lubrication and cleaning is satisfactory, but under hot and dirty conditions, it may be necessary to clean the chain at least once a day and lubricate it several times between cleanings.

When lubricating the chain, apply sufficient lubricant to obtain natural run-off and full coverage, especially in the interlink area.

⚠ WARNING

Used motor oils contain known carcinogenic materials.

TO AVOID INJURY:

Never use used motor oils as a chain lubricant. Only use Lubriplate Bar and Chain Oil 10-R as a lubricant for the load chain.

DC BRAKE ASSEMBLY

The correct air gap between field and armature is .008-.018 in (0.2-0.45 mm) for models B, C, & F and .008-,020 in (0.2-0.5 mm) for models J, JJ, L, LL, R, RR, & RRS. The DC brake is not adjustable. As the friction material wears, the brake gap increases. If the maximum air gap is reached, a new friction disc/rotor should be installed.

LIMIT SWITCH ADJUSTMENT

If limit switch operation has been checked as described on page 9 and is not operating correctly or is not automatically stopping the hook at a desired position, proceed as follows:

1. Disconnect hoist from power supply.
2. Remove back frame cover, see Figure 10.
3. The identification of upper and lower limit switches are indicated on the fiber insulator.

4. Loosen the 2 screws or spring back the rotatable guide to disengage the travel nut.

Table 7. Limit Switch - Hook Travel

Model	Hook Travel w/ 44 T.P.I. Shaft (Standard)		Hook Travel w/ 56 T.P.I. Shaft (Standard)		Hook Travel w/ 64 T.P.I. Shaft (Standard)	
	Max Length of Lift		Max Length of Lift		Max Length of Lift	
	m	ft	m	ft	m	ft
C	63	206	80	262	91	299
B, F	5	15	41	133	46	152
J, L	39	127	49	162	56	185
JJ, LL	76	250	97	318	111	363
R	20	64	25	81	28	93
RR	38	124	48	158	55	181
RRS	38	125	48	159	55	182

Table 8. Limit Switch - Dimensions

Model	Hook Travel, per Notch		A (minimum distance between top of hook block and bottom of hoist)		B (minimum length of loose end chain non-inverted)
	mm	in	mm	in	
C	52.8	2.08	38.1	1.50	6 links
B, F	26.9	1.06	38.1	1.50	6 links
J, L	30.5	1.20	38.1	1.50	8 links
JJ, LL	116.8	4.60	63.5	2.50	8 links
R	15.2	0.60	63.5	2.50	8 links
RR	29.7	1.17	63.5	2.50	8 links
RRS	30.0	1.18	63.5	2.50	30 links

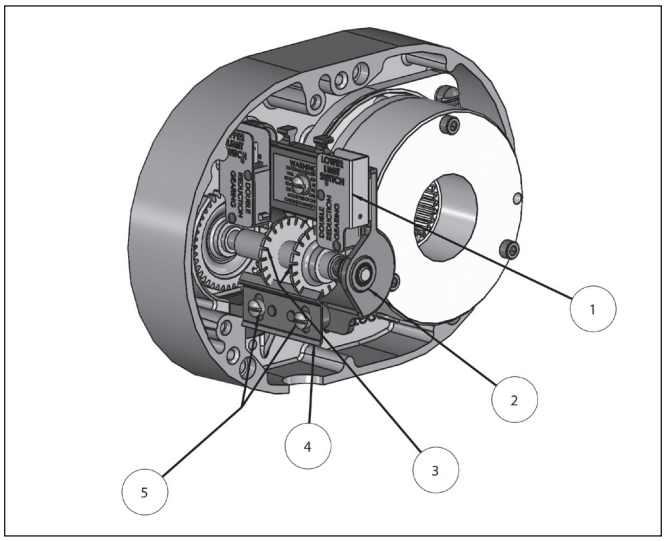

Figure 17. Limit Switches, Models B-F

1. Limit switch sub-assy

2. Limit switch shaft

3. Traveling nuts

4. Guide plate

5. Screws

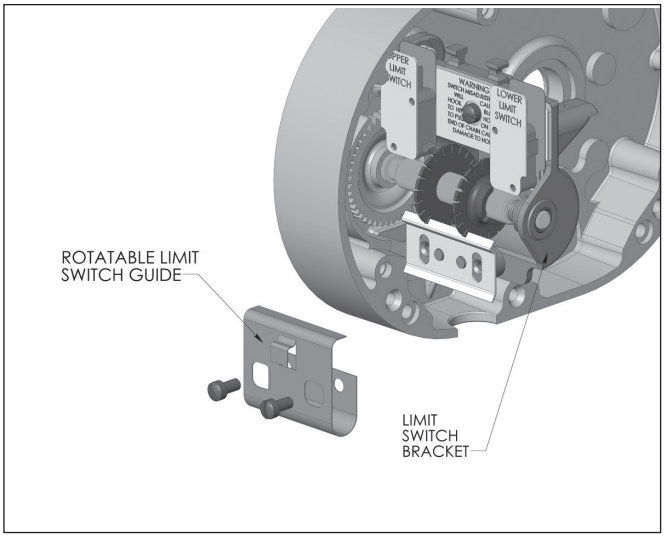

Figure 18. Rotatable Limit Switches, Models B-F

SETTING UPPER LIMIT SWITCH

After completing steps 1 thru 4

5. Refer to Table 8 -The "A" Dimensions given are the minimum distance that should be set between the top hook block and the bottom of the hoist.

CAUTION: THE “A” DIMENSIONS SHOWN IN TABLE 8 ARE THE MINIMUM ALLOWED FOR SAFE OPERATION AND SHOULD NOT BE REDUCED.

6. Reconnect hoist to power supply.
7. Run hook to the desired upper position, cautiously operating the hoist without a load.
8. Disconnect hoist from power supply.
9. Moving one travel nut toward the other increases hook travel and away from the other decreases the travel. Now, turn the nut nearest the switch indicated as the “UPPER LIMIT SWITCH” until it just breaks the limit switch contacts, cautious not to allow the movement of the other travel nut if previously set. An audible click will be heard as the switch opens. Continue to rotate the nut toward the switch an additional one full tooth.

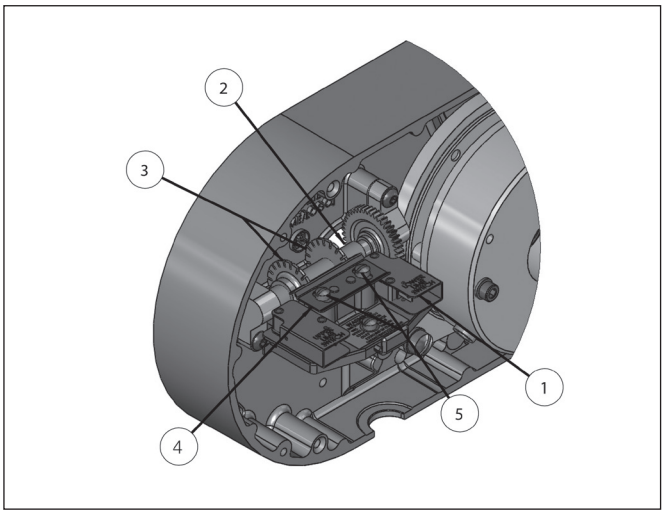

Figure 19. Limit Switches, Models J-RRS

1. Limit switch sub-assy

2. Limit switch shaft

3. Traveling nuts

4. Guide plate

5. Screws

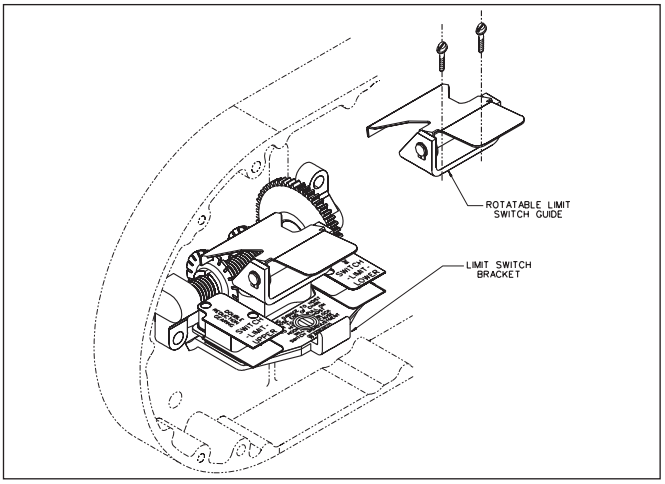

Figure 20. Rotatable Limit Switches, Models J-RRS

10. Securely reposition the guide plate in the slot
11. Reconnect hoist to power supply and check the stopping point of hook by first lowering the hook about 2 feet (61 cm), then raise the hook by jogging cautiously until the upper limit switch stops upward motion. The stopping point of hook should be the desired upper position. If not, repeat the above instructions.
12. Double check setting by lowering the hook about 2 feet (61 cm) and then run the hook into the upper limit with (UP) control held depressed.
13. Fine adjustment of the upper limit setting may be obtained by inverting the stationary guide plate in Step 10. The offset on the plate gives adjustments equivalent to 1/2 notch, see Table 8 for the "Hook Travel Per Notch of Limit Switch Nut." When inverting the plate, it may be necessary to use the notch adjacent to the one used in the preliminary setting.

SETTING LOWER LIMIT SWITCH

After completing steps 1 thru 4

5. Refer to Table 8 -The "B"dimensions given are the minimum length of loose end chain left on the loose side of the lift wheel when the hook is positioned at the lowest allowable hook position.

CAUTION: THE "B" DIMENSIONS SHOWN IN TABLE 8 ARE THE MINIMUM ALLOWED FOR SAFE OPERATIONS AND SHOULD NOT BE REDUCED.

6. Reconnect hoist to power supply.
7. Run hook to the desired lower position, cautiously operating the hoist without a load.
8. Disconnect hoist from power supply.
9. Moving one travel nut toward the other increases hook travel and away from the other decreases hook travel. Now, turn the nut nearest the switch indicated as the "LOWER LIMIT SWITCH" until it just breaks the limit switch contacts, cautious not to allow the movement of the other travel nut if previously set. An audible click will be heard as the switch opens. Continue to rotate the nut toward the switch an additional one full tooth.
10. Securely reposition the guide plate in the slot.
11. Reconnect hoist to power supply and check the stopping point of hook by first raising the hook about 2 feet (61cm) then lower the hook by jogging cautiously until the lower limit switch stops downward motion. The stopping point of the hook should be the desired lower position, if not repeat the above instructions.
12. Double check setting by raising the hook about 2 feet (61 cm) and then run the hook into the lower limit with (DOWN) control held depressed.
13. Fine adjustment of the lower limit setting may be obtained by inverting the stationary guide plate in Step 10. (Not available with the rotatable guide plate). The offset on the gives adjustments equivalent to 1/2 notch, see Table 8 for the "Hook Travel Per Notch of Limit Switch Nut". When inverting the plate, it may be necessary to use the notch adjacent to the one used in the preliminary setting.

CONVERTING LIMIT SWITCH GUIDES

1. Disconnect the hoist from the power supply system.
2. Refer to the exploded views and remove the back frame cover from the hoist.
3. Remove and discard the limit switch guide plate - retaining the 2 screws.
4. Refer to Figure 17 and 19 and assemble the limit switch guide plate to the limit switch bracket. Secure using the 2 screws.

⚠ WARNING

TESTING OF MECHANICAL OVERLOAD PROTECTION

Before using, all altered, repaired or used hoists that have not been operated for the previous 12 months shall be tested by the user for proper operation. First test the unit without a load and then with a light load of 22.7 kg. (50 lb.) times the number of load supporting parts of load chain to be sure that the hoist operates properly and that the brake holds the load when the control is released. Next test with a load of *125% of rated capacity. In addition, hoists in which load sustaining parts have been replaced should be tested with *125% of rated capacity by or under the direction of an appointed person and written report prepared for record purposes. After this test, check that the Load-limiter functions.

***If Load-limiter prevents lifting of a load of 125% of rated capacity, reduce load to rated capacity and continue test.**

NOTE: For additional information on inspection and testing, refer to Code B30.16 "Overhead Hoists" obtainable from ASME Order Department, 22 Law Drive, Box 2300, Fairfield, NJ 07007-2300, U.S.A

TABLE 9. TROUBLESHOOTING CHART

SYMPTOM	PROBABLE CAUSE	CORRECTIVE ACTION
1.) Hook does not respond to the control station or control device	A.) No voltage at hoist-main line or branch circuit switch open; branch line fuse blown or circuit breaker tripped.	A.) Close switch, replace fuse or reset breaker.
	B.) Phase failure (single phasing, three phase unit only)-open circuit, grounded or faulty connection in one line of supply system, hoist wiring, reversing contactor, motor leads or windings.	B.) Check for electrical continuity and repair or replace defective part.
	C.) Upper or lower limit switch has opened the control circuit.	C.) Press the "other" control and the hook should respond. Adjust limit switches as described on page 15.
	D.) 1. Open control circuit-open 2. Shorted winding in transformer 3. Reversing contactor coil 4. Loose connection 5. Broken wire in circuit 6. Mechanical binding in contactor 7. Control station contacts not closing or opening.	D.) Check electrical continuity and repair or replace defective part.
	E.) Wrong voltage or frequency.	E.) Use the voltage and frequency indicated on hoist identification plate. For three phase dual voltage unit, make sure the connections at the voltage change board or PCB are the proper voltage as described on page 8.
	F.) Low Voltage.	F.) Correct low voltage condition as described on page 9.
	G.) Brake not releasing-open or shorted coil winding; armature binding.	G.) Check electrical continuity and connections. Check that correct coil has been installed. The coil for three phase dual voltage unit operates at 230 volts when the hoist is connected for either 230 volt or 460 volt operation. Check brake adjustment as described on page 15.
	H.) Excessive load. Mechanical load protector slipping.	H.) Reduce loading to the capacity limit of hoist as indicated on the identification plate.
2.) Hook moves in wrong direction.	A.) Phase reversal (three phase unit only).	A.) Refer to installation instruction on page 8.
3.) Hook lowers but will not raise.	A.) Excessive load. Mechanical load protector slipping.	A.) See item 1H.
	B.) Open hoisting circuit-open or shorted winding in reversing contactor coil loose connection or broken wire in circuit; control station contacts not making; upper limit switch contacts open.	B.) Check electrical continuity and repair or replace defective part. Check operation of limit switch as described on page 9.
	C.) Phase failure (three phase unit only).	C.) See item 1B.
4.) Hook raises but will not lower	A.) Open lowering circuit-open or shorted winding in reversing contactor coil, loose connection or broken wire in circuit; control station contacts not making; lower limit switch contacts open.	A.) Check electrical continuity and repair or replace defective part. Check operation of limit switch as described on page 9.
5.) Hook lowers when hoisting control is operated.	A.) Phase failure (three phase unit only).	A.) See item 1B.
	B.) Phase reversal (three phase unit only).	B.) Refer to installation instruction on page 8.

TABLE 9. TROUBLESHOOTING CHART

SYMPTOM	PROBABLE CAUSE	CORRECTIVE ACTION
6.) Hook does not stop promptly.	A.) Brake slipping.	A.) Check brake adjustment as described on page 15.
	B.) Excessive load.	B.) See item 1H.
7.) Hoist operates sluggishly.	A.) Excessive load.	A.) See item 1H.
	B.) Low voltage.	B.) Correct low voltage condition as described on page 9.
	C.) Phase failure or unbalanced current in the phases (three phase unit only).	C.) See item 1B.
	D.) Brake dragging.	D.) Check brake air gap as described on page 15.
8.) Motor overheats.	A.) Low voltage.	A.) Correct low voltage condition as described on page 9.
	B.) Excessive load.	B.) See item 1H.
	C.) Extreme external heating.	C.) Above an ambient temperature of 40°C. (104°F.), the frequency of hoist operation must be limited to avoid overheating of motor. Special provisions should be made to ventilate the space or shield the hoist from radiation.
	D.) Frequent starting or reversing.	D.) Avoid excessive inching, jogging or plugging. This type of operation drastically shortens the motor and contactor life and causes excessive brake wear.
	E.) Phase failure or unbalanced current in the phase (three phase unit only).	E.) See item 1B.
	F.) Brake dragging.	F.) Check brake air gap as described on page 15.
9.) Hook fails to stop at either or both ends of travel.	A.) Limit switches not opening circuits.	A.) Check switch connections, electrical continuity and mechanical operation. Check the switch adjustment as described on page 15.
	B.) Limit Switch Shaft not rotating.	B.) Check for damaged Limit Switch gears.
	C.) Traveling nuts not moving along shaft; guide plate loose; shaft or nut threads damaged.	C.) Tighten guide plate screws. Replace damaged part.
10.) Hook stopping point varies.	A.) Limit switch not holding adjustment.	A.) See item 9.
	B.) Brake not holding.	B.) Check the brake air gap as described on page 15.
	C.) Binding of Limit Switch Shaft.	C.) Check Limit Switch Bearing for proper seating.

ELECTRICAL DATA

TO DETECT OPEN AND SHORT CIRCUITS IN ELECTRICAL COMPONENTS

Open circuits in the coils of electrical components may be detected by isolating the coil and checking for continuity with an ohmmeter or with the unit in series with a light or bell circuit.

Shorted turns are indicated by a current draw substantially above normal (connect ammeter in series with suspected element and impose normal voltage) or D.C. resistance substantially below normal. The current method is recommend for coils with very low D.C. resistance.

Motor current draw in the stator should be measured with the rotor in place and running. Brake, relay and contactor coil current should be measured with the core iron in operating position.

Table 10a. Transformer Data

Transformer Voltage	Leads	*D.C. Resistance (Ohms)
115 to 24	X2 to X1 H2 to H1	1.1 14.4
115 to 48	X2 to X1 H2 to H1	3.5 14.4
230/460 to 24 220/380 to 24 220/415 to 24	X2 to X1 H2 to H1 H4 to H3	1.1 106 130
230/460 to 48 220/380 to 48 220/415 to 48	X2 to X1 H2 to H1 H4 to H3	3.5 106 130
230/460 to 115 220/380 to 115 220/415 to 115	X2 to X1 H2 to H1 H4 to H3	21 106 130
575 to 24	X2 to X1 H2 to H1	1.1 373
575 to 48	X2 to X1 H2 to H1	3.5 373
575 to 115	X2 to X1 H2 to H1	21 373
Lodestar Equipped with PCB		
230/460 to 24 220/380 to 24 220/415 to 24	Pin 1 to 5 Pin 5 to 7 Pin 9 to 13	245 635 3.2
230/460 to 115 220/380 to 115 220/415 to 115	Pin 1 to 5 Pin 5 to 7 Pin 9 to 13	205 658 51

Table 10b. Contactor Data

Models	Contactor Coil Voltage	Nominal Current (Amps)	*D.C. Resistance (Ohms)
B thru RRS	115	0.04	29.75
	48	0.09	56.3
	24	0.19	14.9

*Resistance Values listed are nominal and they may vary slightly from component to component.

**On dual voltage units (230/460-3-60, 220/380-3-50 and 220/415-3-50), brake coils operate on 230 (220) volts.

Table 10c. Electric Brake Data

Models	DC Brake Coil Voltage	Nominal Current (Amps)	*D.C. Resistance (Ohms)
B, C and F	103	0.243	424.4
	205	0.122	1681
	255	0.098	2601
J, L and R	103	0.311	331.5
J, JJ, L, LL, R, RR, & RRS	205	0.161	1273
	255	0.118	2167

Table 10d. Motor Data

Models/ Cap.	Volts-Phase-Hertz	H.P. (kW)	Full Load Current (Amps)	Motor Leads	*D.C. Resistance (Ohms)
B -1/4 Ton (250 kg) C -1/4 Ton (250 kg) F - 1/2 Ton (500 kg)	115/230-1-60	1/2 (.37)	7.2/3.6	1 to 2	1.9
				3 to 4	
				5 to 8	3.6
	110/220-1-50		6.4/3.2	1 to 2	2.7
				3 to 4	
				5 to 8	3.5
	230/460-3-60		1.8/.9	1 to 4	7.8
				2 to 5	
	220/380-3-50		2.1/1.0	3 to 6	
				8 to 9	15.6
	220/415-3-50		2.1/1.0	8 to 7	
				9 to 7	
J - 1/2 Ton (500 kg) L - 1 Ton (1000 kg) R - 2 Ton (2000 kg)	115/1-60	1 (.74)	9.8	1 to 2	1.1
			9.8	3 to 4	
	110/1-50		11.6	3 to 4	1.1
			11.6	5 to 8	1.3
J - 1/2 Ton (500 kg) L - 1 Ton (1000 kg) R - 2 Ton (2000 kg)	230/460-3-60	1 (.74)	3.0/1.5	1 to 4	4.7
				2 to 5	
	220/380-3-50		3.6/1.8	3 to 6	
				8 to 9	9.4
	220/415-3-50		3.6/1.8	8 to 7	
				9 to 7	
JJ - 1/2 Ton (500kg) LL - 1 Ton (1000kg) RR - 2 Ton (2000kg) RRS - 2 Ton (2000kg)	230/460-3-60	2 (1.5)	5.8/2.9	1 to 4	2.2
				2 to 5	
	220/380-3-50		6.4/3.3	3 to 6	
				8 to 9	9.4
	220/380-3-50		6.4/3.3	8 to 7	
				9 to 7	

TORQUE SPECIFICATIONS

Table 11a. Torque Specification: All Models

Fastener	Fastener Description	Tool Required	*Recommended Seating Torque	
			ft-lbf	N-m
Brake End Cover	1/4"-20 Socket Head Cap Screw	3/16" Hex Driver	4.2 - 5.0	5.7 - 6.8
Motor End Cover	1/4"-20 Socket Head Cap Screw	3/16" Hex Driver	4.2 - 5.0	5.7 - 6.8
Reversing Contactor Connecting Screws-1ø	Terminal Clamp Screw	Phillips no. 2 or 3/16" slotted head screwdriver	0.6 - 1.0	0.8 - 1.3
Reversing Contactor Connecting Screws-3ø	Terminal Clamp Screw	Phillips no. 2 or 3/16" slotted head screwdriver	0.6 - 1.0	0.8 - 1.3
Limit Switch Guide Screws	#10-24 Button Head Socket Cap Screw	5/32" Hex Driver	1.7 - 2.1	2.3 - 2.8
#6-32 Button Head Screw for Contactor Plate Applications	#6-32 Button Head Socket Cap Screw	5/64" Hex Driver	0.7 - 0.8	0.9 - 1.1
#8-32 Button Head Screw for Contactor Plate Applications	#8-32 Button Head Socket Cap Screw	3/32" Hex Driver	1.1 - 1.4	1.5 - 1.9
#10-24 Button Head Screw for Contactor Plate Applications	#10-24 Button Head Socket Cap Screw	5/32" Hex Driver	1.7 - 2.1	2.3 - 2.8
1/4-20 Button Head Screw for Miscellaneous Applications	1/4-20 Button Head Socket Cap Screw	5/32" Hex Driver	4.2 - 5.0	5.7 - 6.8
Cord Grips	ø3/4" NPT Cord Grip	1-1/16" Hex Socket or Wrench	5.0 - 5.8	6.8 - 7.9
Cord Grip Dome Nut	1-1/16" Dome Nut for Cord Grip	2X 1-1/16" Wrench, hold the cord grip body while tightening the dome nut	3.3 - 4.5	4.5 - 6.1
			or until cord does not slip	

Table 11b. Torque Specification: Models B-F

Fastener	Fastener Description	Tool Required	*Recommended Seating Torque	
			ft-lbf	N-m
Motor Housing / Gear Housing / Back Frame Screws	1/4"-20 Socket Head Cap Screw	3/16" Hex Driver	7.9 - 8.3	10.7 - 11.3
Lift-Wheel Nut	1"-12 Hex Nut	1-1/2" - 6 or 12 Point Socket	55.0 - 60.0	74.6 - 81.3
Brake Attaching Screws	1/4-20 Button Head Socket Cap Screw	5/32" Hex Driver	4.2 - 5.0	5.6 - 6.8
Brake Field Mounting Screws	M5 Socket Head Cap Screw	4mm Hex Driver	4.0 - 4.7	5.4 - 6.4
Contactor Plate Mounting Nuts	1/4-20 Hex Nut	7/16" - 6 or 12 Point Socket	2.0 - 2.5	2.7 - 3.4
Suspension Adapter Screws	3/8"-16 - 12-Point Cap Screw	3/8" - 12 Point Socket	35.0 - 45.0	47.5 - 61.0
"Lower Hook Block Screws (Double Reeved)"	1/4"-20 Socket Head Cap Screw	3/16" Hex Driver	5.0 - 5.8	6.8 - 7.9
Loose End Screw	1/4"-20 Socket Head Cap Screw	3/16" Hex Driver	4.2 - 5.0	5.6 - 6.8
Chain Stop Screw	1/4"-20 Socket Head Cap Screw	3/16" Hex Driver	5.0 - 5.8	6.8 - 7.9
External Chain Plate	1/4"-20 Socket Flat Head Screw	5/32" Hex Driver	4.2 - 5.0	5.7 - 6.8 N-M

Table 11c. Torque Specification: Models J-RR

Fastener	Fastener Description	Tool Required	*Recommended Seating Torque	
			ft-lbf	N-m
Motor Housing / Gear Housing / Back Frame Screws	5/16"-18 Socket Head Cap Screw	1/4" Hex Driver	14.2 - 15.0	19.2 - 20.3
Lift-Wheel Nut	1-1/8"-12 Hex Nut	1-11/16" - 6 or 12 Point Socket	85.0 - 90.0	115.2 - 122.0
Brake Attaching Screw	5/16"-18 Socket Head Cap Screw	1/4" Hex Driver	4.2 - 5.0	5.6 - 6.8
Brake Field Mounting Screws	M6 Socket Head Cap Screw	5mm Hex Driver	7.1 - 7.9	9.6 - 10.7
Stator Mounting Screws	1/4"-20 Hex Cap Screw	3/8" - 6 or 12 Point Socket	4.2 - 5.0	5.6 - 6.8
Suspension Adapter Screws	1/2"-20 12-Point Cap Screw	1/2" - 12 Point Socket	70.0 - 80.0	94.9 - 108.5
Lower Hook Block Screws (Double Reeved)	5/16"-18 Socket Head Cap Screw	1/4" Hex Driver	10.0 - 11.3	13.6 - 15.3
Loose End Screw	5/16"-18 Socket Head Cap Screw	1/4" Hex Driver	8.0 - 10.0	10.8 - 13.6
Chain Stop Screw	1/4"-20 Socket Head Cap Screw	3/16" Hex Driver	5.0 - 5.8	6.8 - 7.9
External Chain Plate	1/4"-20 Socket Flat Head Screw	5/32" Hex Driver	4.2 - 5.0	5.7 - 6.8 N-M

Table 11d. Torque Specification: Model RRS

Fastener	Fastener Description	Tool Required	*Recommended Seating Torque	
			ft-lbf	N-m
Main Frame/ Intermediate Frame/ Back Frame Screws	5/16"-18 Socket Head Cap Screw	1/4" Hex Driver	14.2 - 15.0	19.2 - 20.3
3rd Pinion Nut	1-1/8"-12 Hex Nut	1-11/16" - 6 or 12 Point Socket	85.0 - 90.0	115.2 - 122.0
Chain Chute Pin Set Screw	1/2-13 Hex Recess Set Screw	1/4" Hex Driver	11.7 - 13.3	15.8 - 18.1
Brake Attaching Screw	5/16"-18 Socket Head Cap Screw	1/4" Hex Driver	4.2 - 5.0	5.6 - 6.8
Brake Field Mounting Screws	M6 Socket Head Cap Screw	5mm Hex Driver	7.1 - 7.9	9.6 - 10.7
Stator Mounting Screws	1/4"-20 Hex Cap Screw	3/8" - 6 or 12 Point Socket	4.2 - 5.0	5.6 - 6.8
Suspension Retainer Screw	1/4"-20 Socket Head Cap Screw	3/16" Hex Driver	4.2 - 5.0	5.6 - 6.8
Chain Container Bracket Mounting Screws	9/16"-18 Socket Head Cap Screw	7/16" Hex Driver	20.0 - 50.0	27.1 - 67.8
Chain Stop Screws	5/16"-18 Socket Head Cap Screw	1/4" Hex Driver	10.0 - 13.0	13.6 - 17.6

*All Torque values are for clean,dry fasteners. DO NOT apply oil or any other lubricant to the fastener threads