STUART RUSH

BATTERYSTAR

BATTERY POWERED CHAIN HOIST

READY WHEN YOU ARE.

Do you need the lifting strength and speed of an electric chain hoist and power is not available or the portability of a manual hoist without the time-consuming effort of manually operating the hoist? Then turn to the BatteryStar™ Battery Powered Chain hoist built with industry-leading technology from **Stuart Rush** and Milwaukee Tool®. Designed for portability and easy installation, **the BatteryStar can have you lifting in minutes** – simply attach the hoist to an anchor point, slide in a battery, and you're ready to go!

Powered by an industry-leading **M18™ Red Lithium Battery from Milwaukee Tool®**, the BatteryStar is built for heavy-duty lifting and uses the same M18™ battery you may already have on your job site for added convenience.

Designed for safety and ease of use, the BatteryStar is **controlled by a wireless remote** to keep the operator out of the load path. The remote also features built-in intelligence, alerting the operator of an overload situation or if hoist inspection is due.*

Whether you're lifting materials at a construction site or moving equipment into place for an outdoor concert, the BatteryStar has the **power and speed** you need for any application – especially when external power is not available.

*Hoist inspection light is based on the recommended annual hoist inspection for normal use. Refer to the operator's manual for inspection recommendations by application. Hoist inspection indication requires the use of ONE-KEY™.

STUART RUSH
BATTERYSTAR
BATTERY POWERED CHAIN HOIST

FEATURES AND BENEFITS

Capacity: 1 metric ton | **Lift:** 20 ft. standard. Optional lifts to 60 ft. | **Lift Speed:** 8 feet per minute

NO ELECTRIC POWER REQUIRED

- Operates on battery power, specifically a Milwaukee Tool® brand M18™ battery, making it ideal for temporary applications or areas of a facility or job site where electricity is unavailable or difficult to reach.
- Provides lifting speeds up to 8 FPM, helping increase operator efficiency as much as 4x compared to using a manual hoist. Hoist also helps reduce operator effort and fatigue as compared to using a lever or hand chain hoist.

PORTABILITY

- Weighing less than 50 lbs. when 20 feet of chain is included, the BatteryStar is compact and lightweight for easy portability within a facility or to a job site.
- Optional road/carrying cases available. Contact us for details.

VERSATILE OPERATION

- Hoist can be used in either typical mounting orientation with the hoist body attached to the anchor point or inverted.
- Inverted operation eliminates the need to carry the weight of the hoist up to the anchor point. Just carry the hook up to the anchor point and let the hoist lift itself and the load up.

QUICK & EASY INSTALLATION

- Lightweight and portable, the BatteryStar can be easily attached to an anchor point, then you're ready to lift. No cords or power is required.
- Simply snap a charged battery into place, and the hoist is ready to operate.

DURABILITY & RELIABILITY

- Electronic clutch and secondary mechanical clutch provide dual protection from hoist overload.
- Integrated limit switch for the highest and lowest hook position considerably extends the service life of the slip clutch, motor, and gearbox.
- Electronics are IP55 rated.

PRECISE LIFTING

- Hoist offers true variable speed, allowing for precise lifting in any application.

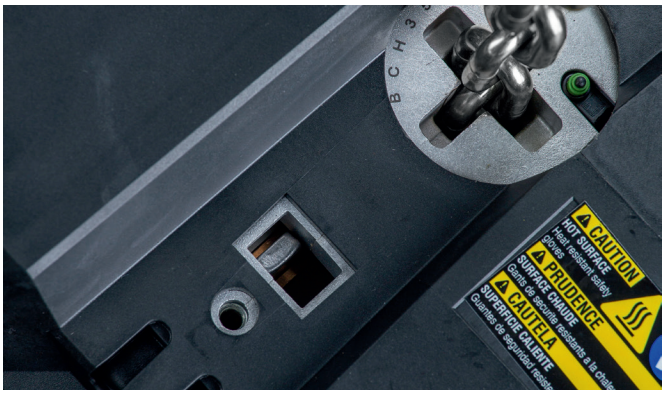

PATENT-PENDING BRAKE

- With a patent-pending design, the mechanical brake automatically applies itself when lowering the load, providing controlled descent and positioning.
- Brake inspection windows on the top and bottom of the hoist allow operators to easily check brake wear, helping to facilitate preventative maintenance.

SAFE, REMOTE OPERATION

- Remote buttons allow for true variable speed – the further you push the button, the faster the lifting speed. This allows the operator to precisely position the load.
- Wireless remote keeps the operator safe and away from the load, allowing for operation from over 60 ft. away from the hoist.
- Remote features built-in intelligence, alerting the operator with light-up icons if the hoist is overcapacity, low battery, or hoist inspection is due.* See image above.
- Rugged and durable, the remote is IP55 rated and can stand up to the harsh conditions of any worksite.
- Remote is easy to connect. Features a light to show that connection is in progress, and the hoist makes an audible sound when connection is complete.
- Standard stop button easily disables the remote.
- Remote includes a lanyard to prevent the operator from dropping it during operation and a belt clip for easy portability.
- RF-certified.

LONG HOIST & CHAIN LIFE

- Rugged composite hoist cover designed for durability in rough conditions.
- Brushless DC motor for extended hoist life.
- Zinc-plated load chain for protection against corrosion.

OTHER FEATURES:

- 5-year hoist warranty from Stuart Rush. 3-year battery warranty from Milwaukee Tool®.
- FEM 1Cm rated. Third-party certified to UL and CSA requirements.
- Chain bag provided as standard.

*Hoist inspection light is based on the recommended annual hoist inspection for normal use. Refer to the operator's manual for inspection recommendations by application. Hoist inspection indication requires the use of ONE-KEY™.

FEATURES AND BENEFITS

TRUSTED, HIGH-QUALITY BATTERY

- Supplied battery is fully compatible with more than 250 Milwaukee Tool® products utilizing M18™ batteries for added convenience on the job site.
- Unique patented designs protect every REDLITHIUM™ Battery, safeguarding your investment through drops, weather exposure, and harsh environments.
- Hoist includes Milwaukee Tool® ONE-KEY™* that allows you to:
  - Connect your hoist and other smart tools to your job site for easy asset management and tracking.
  - Access to equipment information from your computer or smartphone with an easy-to-use app and interface.
  - Inspection interval feature to set reminders and store records of hoist inspections.

HOOK TRAVEL DISTANCE BY LOAD CAPACITY

Battery	Load (tonnes)	*Hook Travel (ft.)
12.0 Ah Battery	1/4	480
	1/2	300
	3/4	220
	1	180

*Estimated total travel with equal lifting and lowering

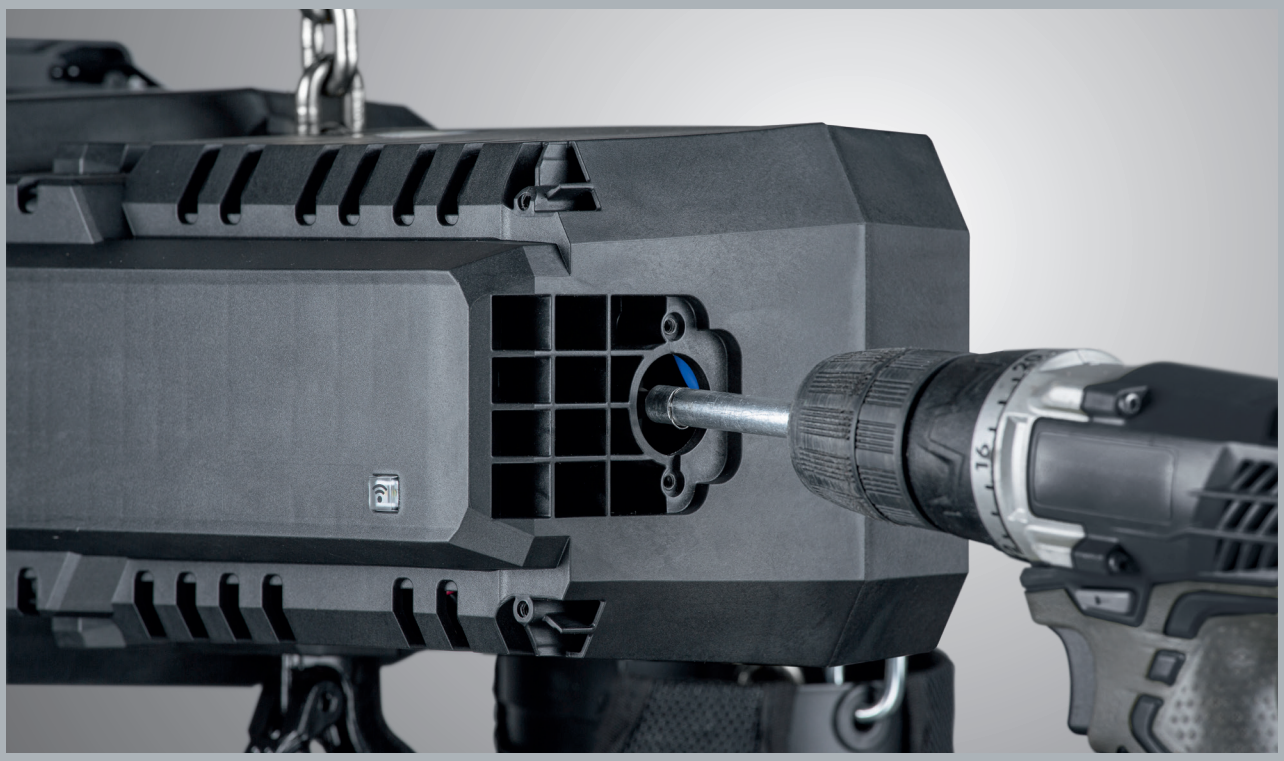

If the battery runs out during hoist operation, the load can be manually lowered. Simply open the end compartment and use a screwdriver or power drill to lower the load.

PART NUMBERS AND DIMENSIONS

Product Number	Capacity	Hoist Speed (FPM)	Suspension Type	Lift (ft)*	Battery / Charger Included
BCC1008R201US	1 metric ton (1000kg)	8	Rigid Latch Type	20 ft	Yes
BCC1008R202US	1 metric ton (1000kg)	8	Rigid Latch Type	20 ft	No
BCC1008S201US	1 metric ton (1000kg)	8	Swivel Latch Type	20 ft	Yes
BCC1008S202US	1 metric ton (1000kg)	8	Swivel Latch Type	20 ft	No

*Can be ordered in 1 ft increments using BCC1008 configured code

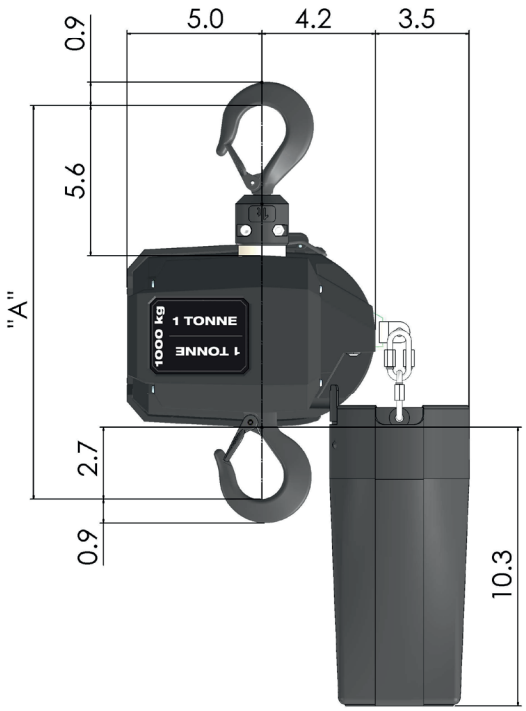

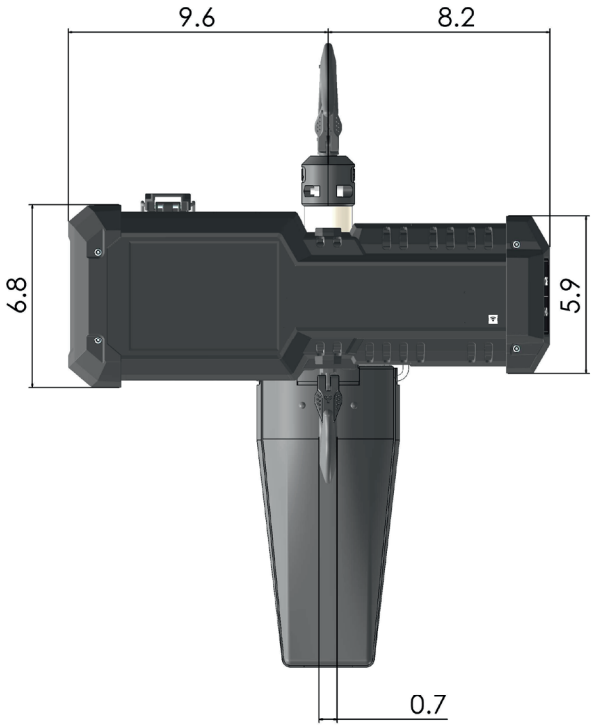

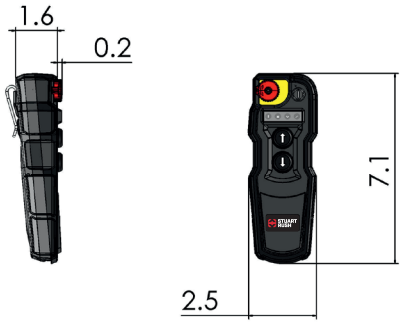

HEADROOM

Hook Type	Dimension "A" (inches)
RIGID	14.6
SWIVEL	15.8